MEDIA
OFFICE
LIVING

MAJA MÖBEL

5505

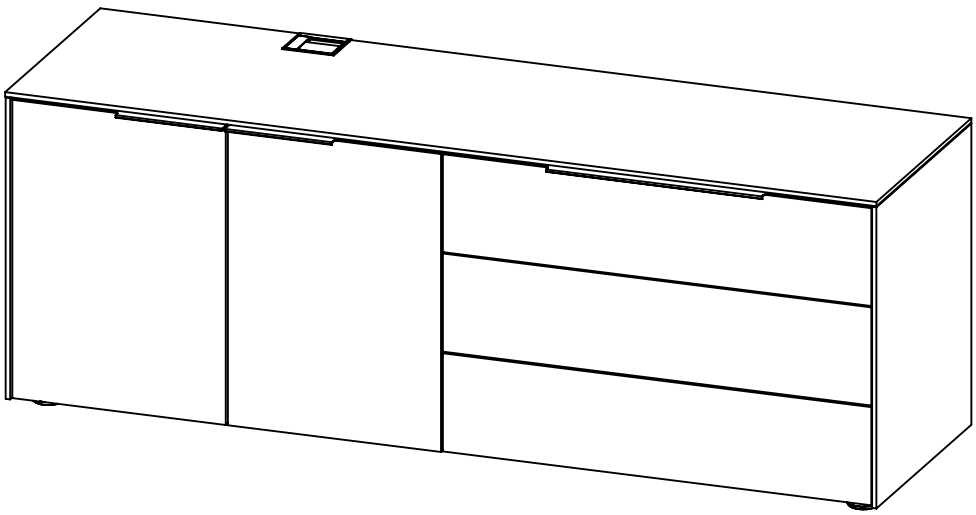

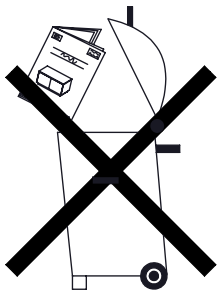

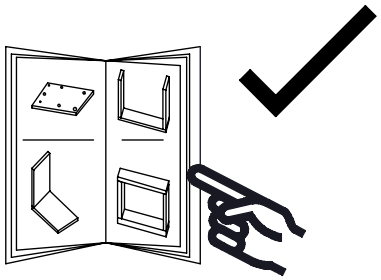

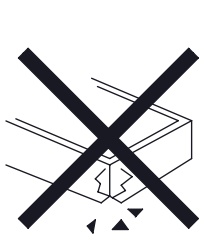

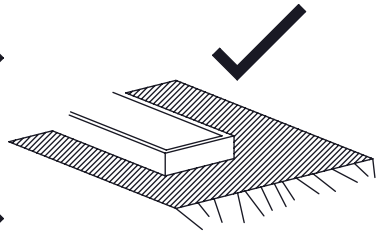

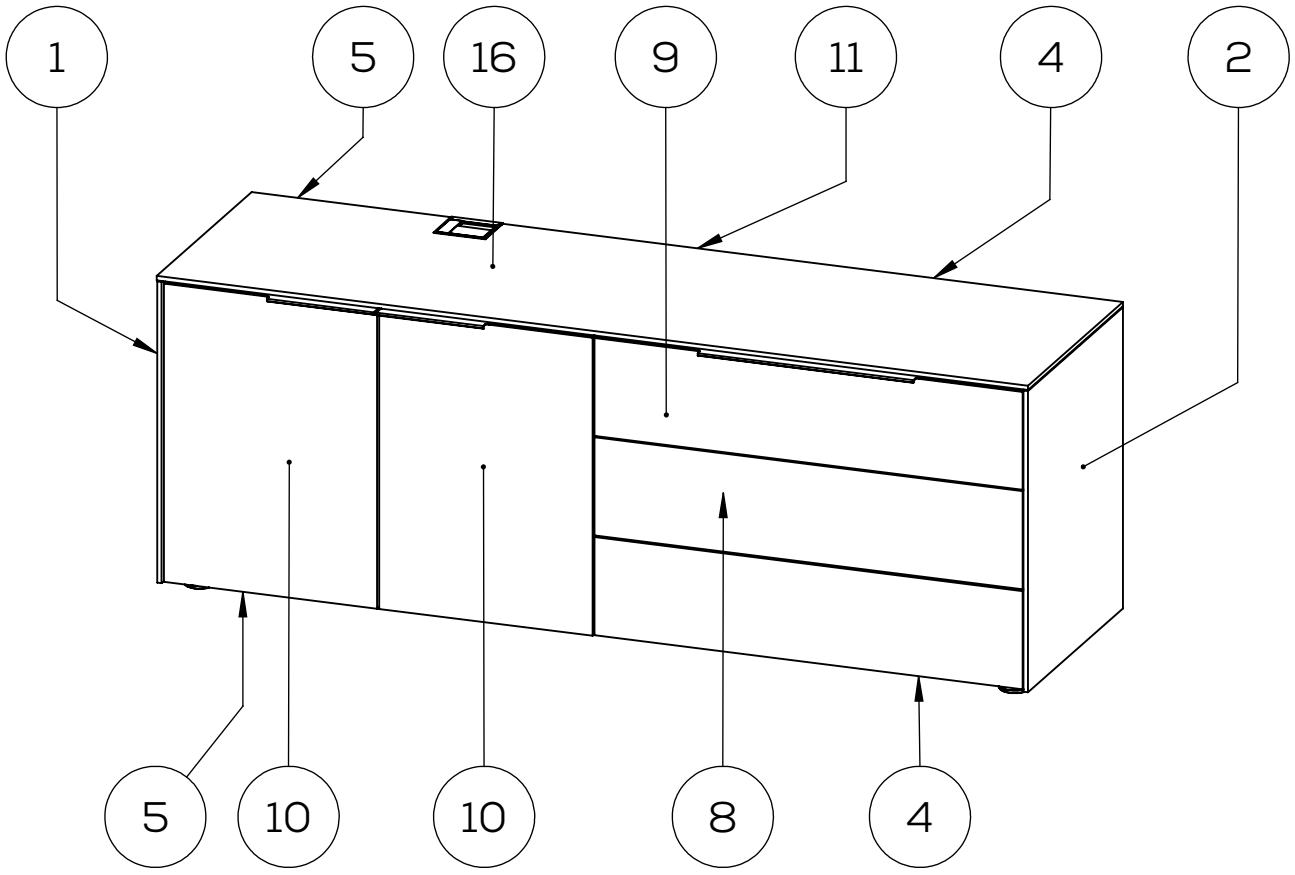
1
5
16
9
11
4
2
5
10
10
8
4

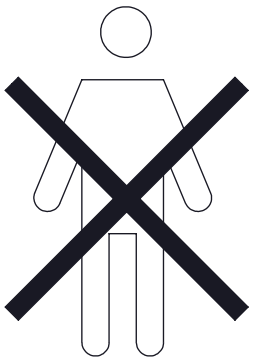

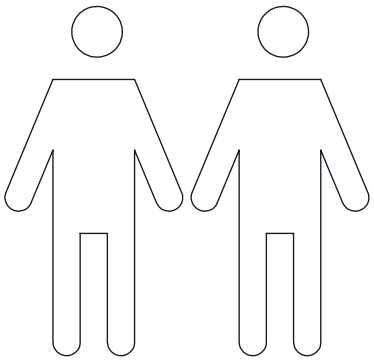

45 min

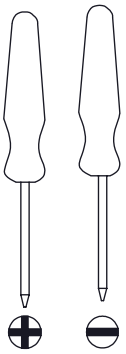

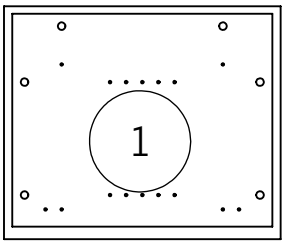

90335

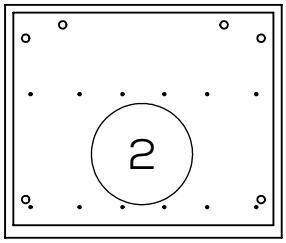

90536

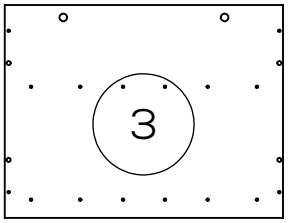

07402

2x

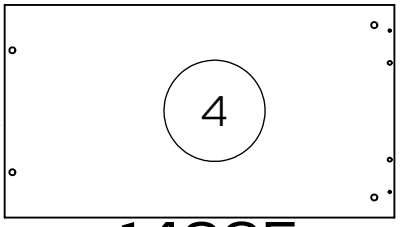

14265

2x

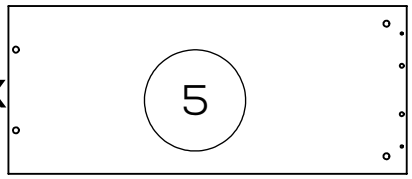

14456

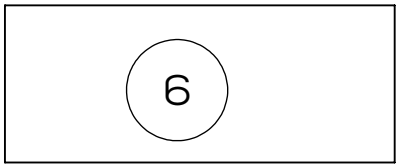

16291

3x

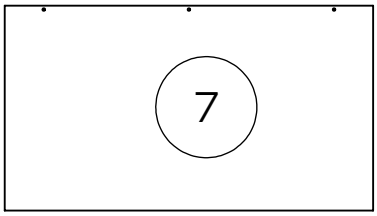

19103

2x

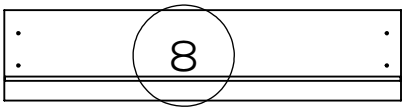

20328

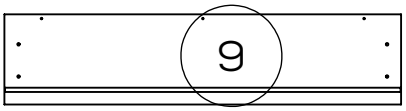

20329

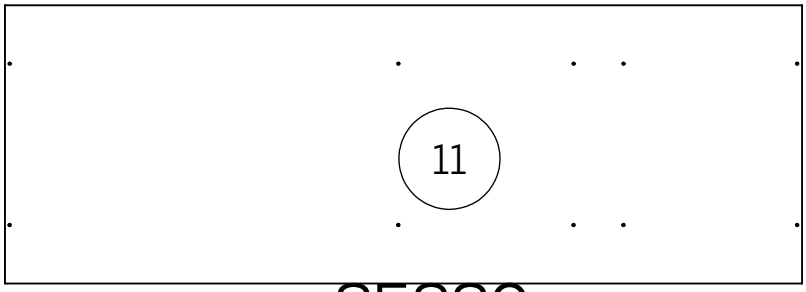

25220

2x

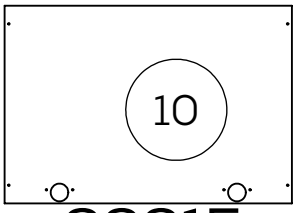

22215

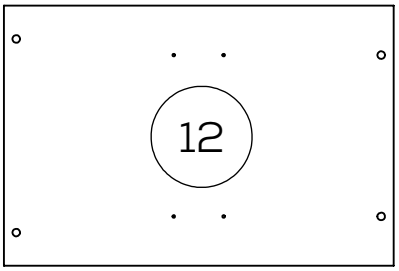

25221

3x

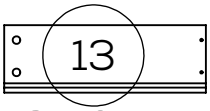

31051

3x

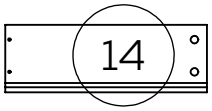

32051

3x

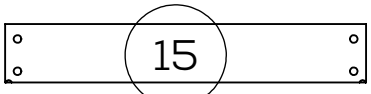

33143

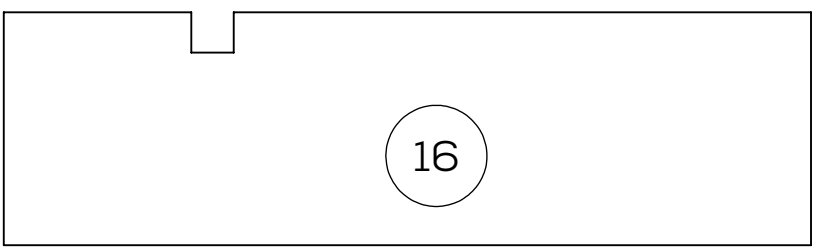

34102

2x

34188

A
(E701000)

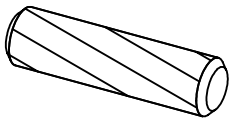

16x

B
(E701153)

58x

C
(E701231)

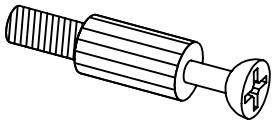

58x

D
(E706327)

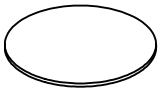

8x

E
(E710370)

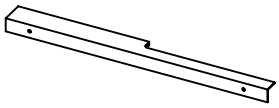

1x

F
(E710371)

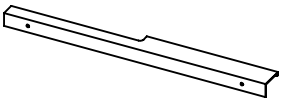

1x

G
(E710376)

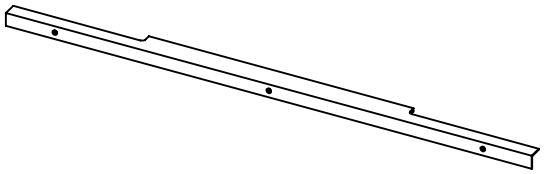

1x

H
(E703119)

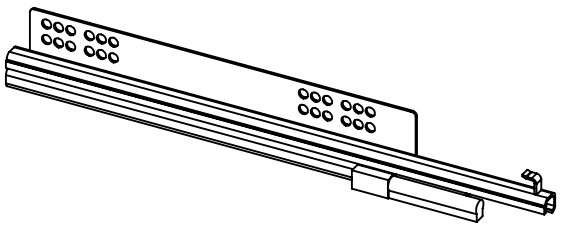

1x

J
(E703120)

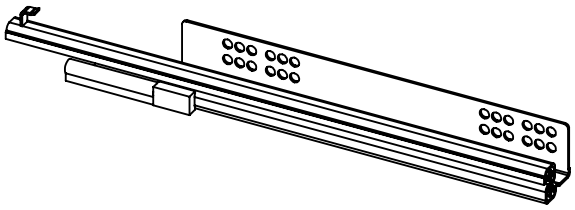

1x

K
(E703117)

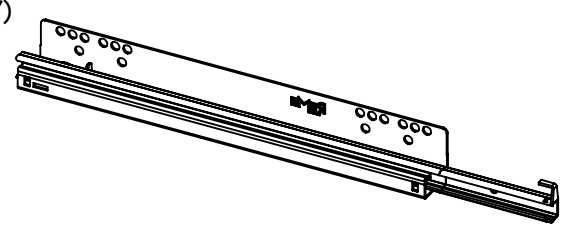

2x

L
(E703118)

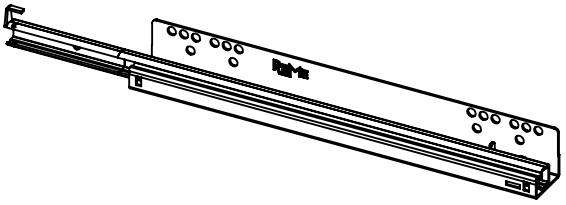

2x

M
(E800137)

2x

N
(E703401)

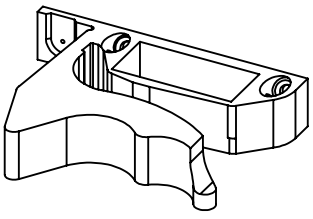

1x

P
(E703402)

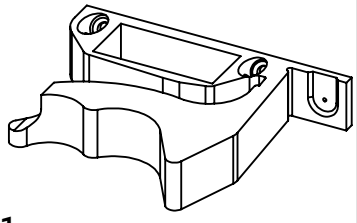

1x

R
(E709792)

4x

V
(E709724)

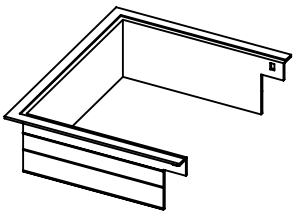

1x

W
(E709726)

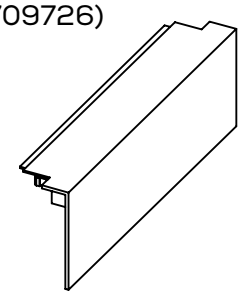

1x

X
(E709727)

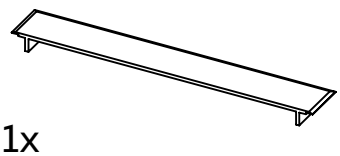

1x

Z
(E704475)

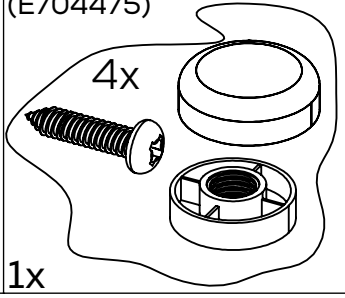

1x

a (E704476) 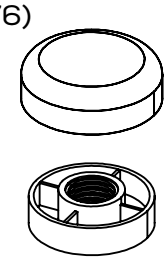 2x	b (E700000) 4x Ø3,0x12	e (E700000) 8x Ø4,0x15	g (E700140) 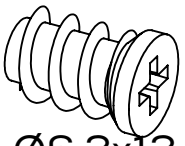 12x Ø6,3x13
h (E700060) 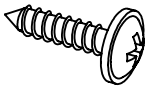 9x Ø3 x 30	m (E702004) 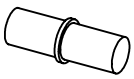 4x	n (E703408) 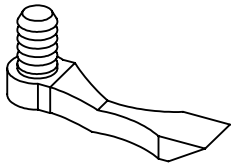 4x	p (E706310) 2x
q (E700020) 8x Ø3,5x13	r (E700020) 7x Ø3,0x12	s (E705044) 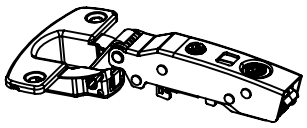 2x	t (E705046) 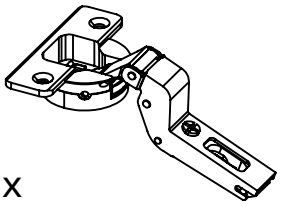 2x
w (E705074) 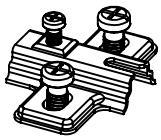 4x			

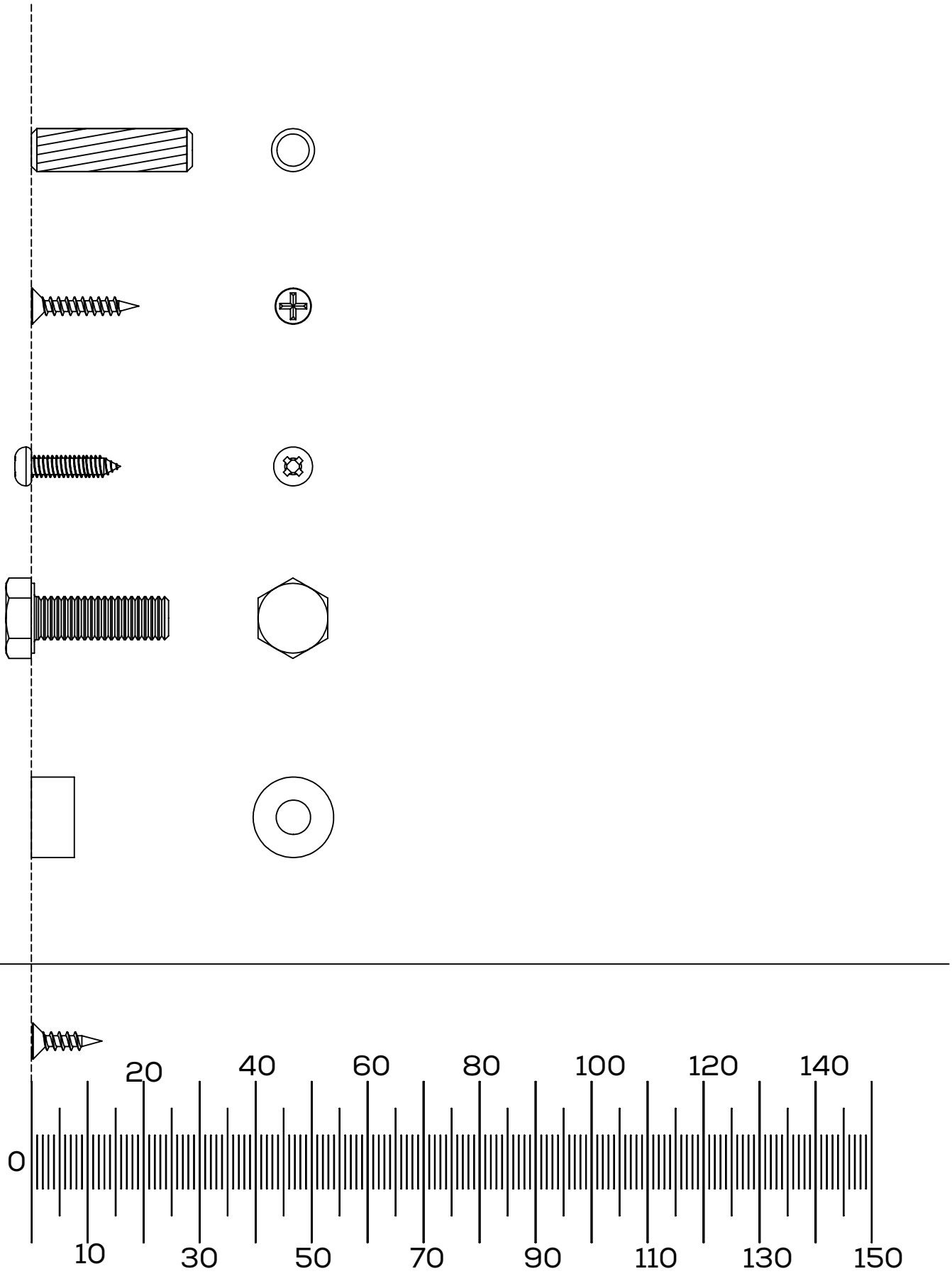
0
20
40
60
80
100
120
140
10
30
50
70
90
110
130
150

1

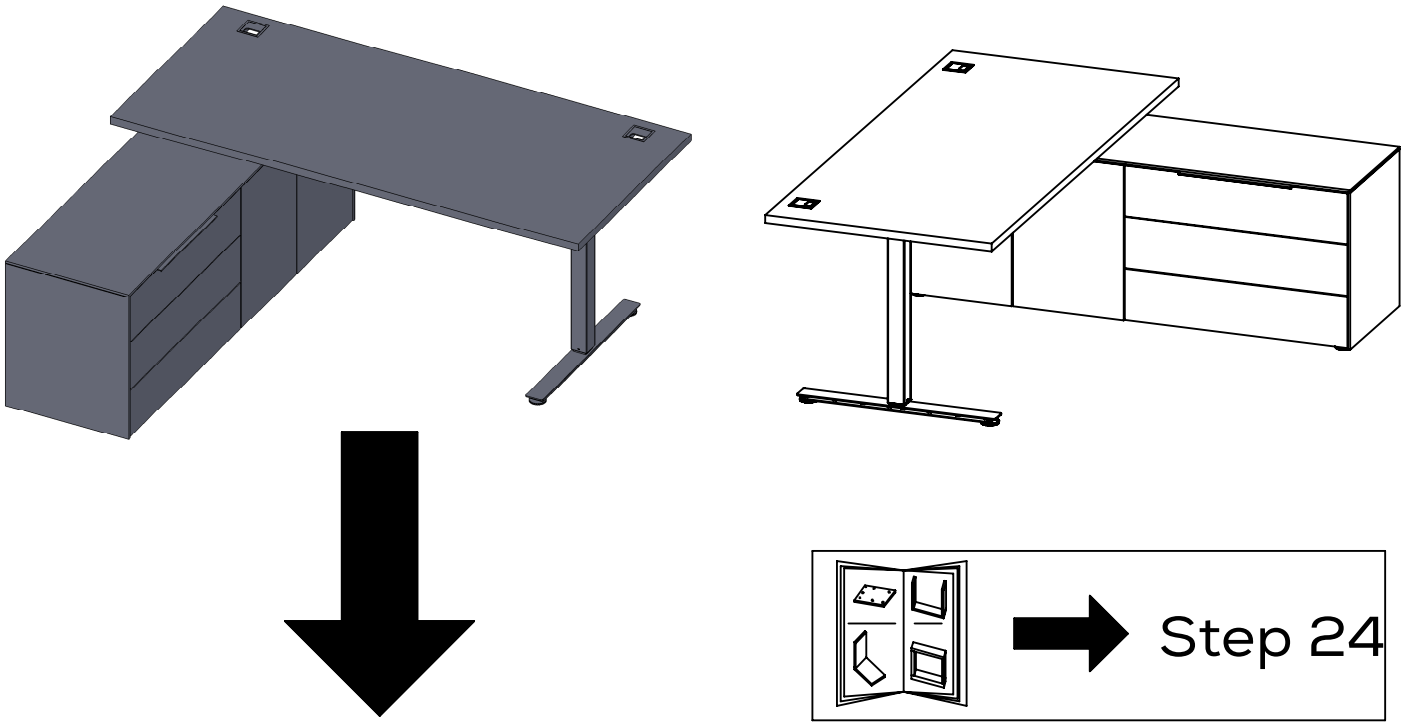

2

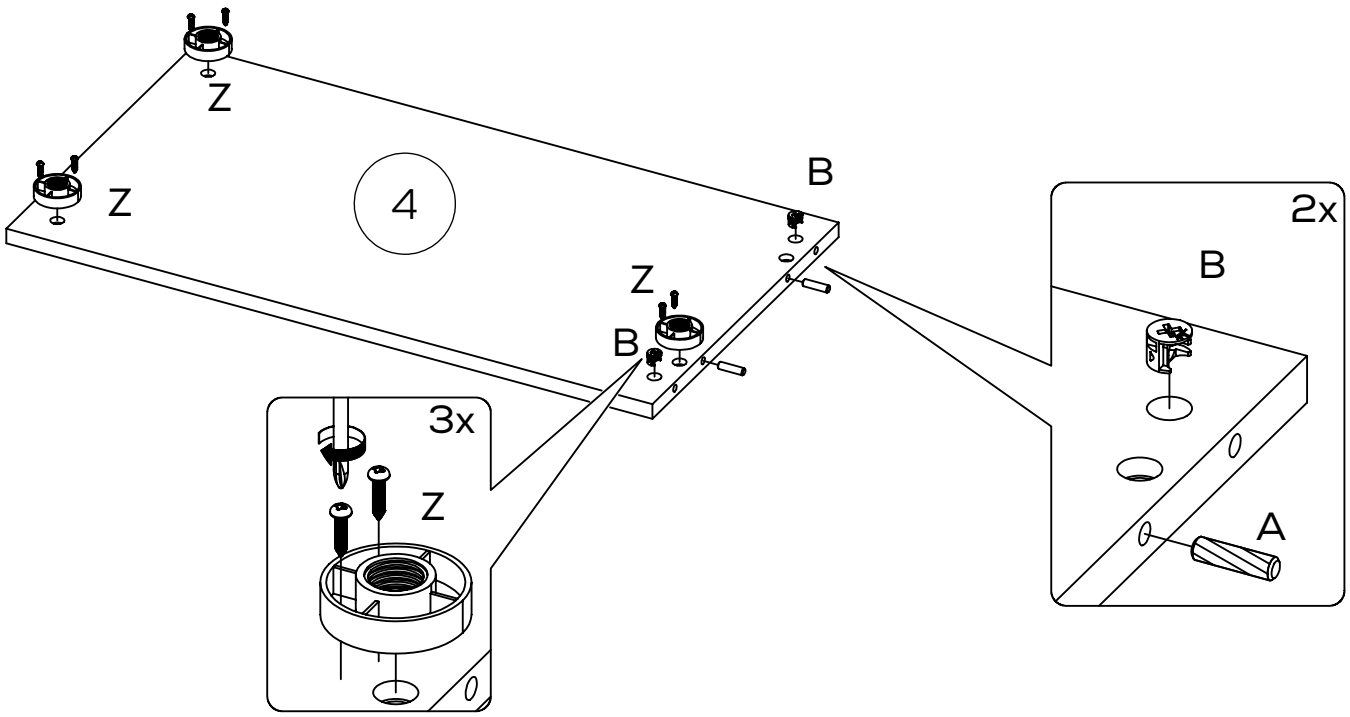

3

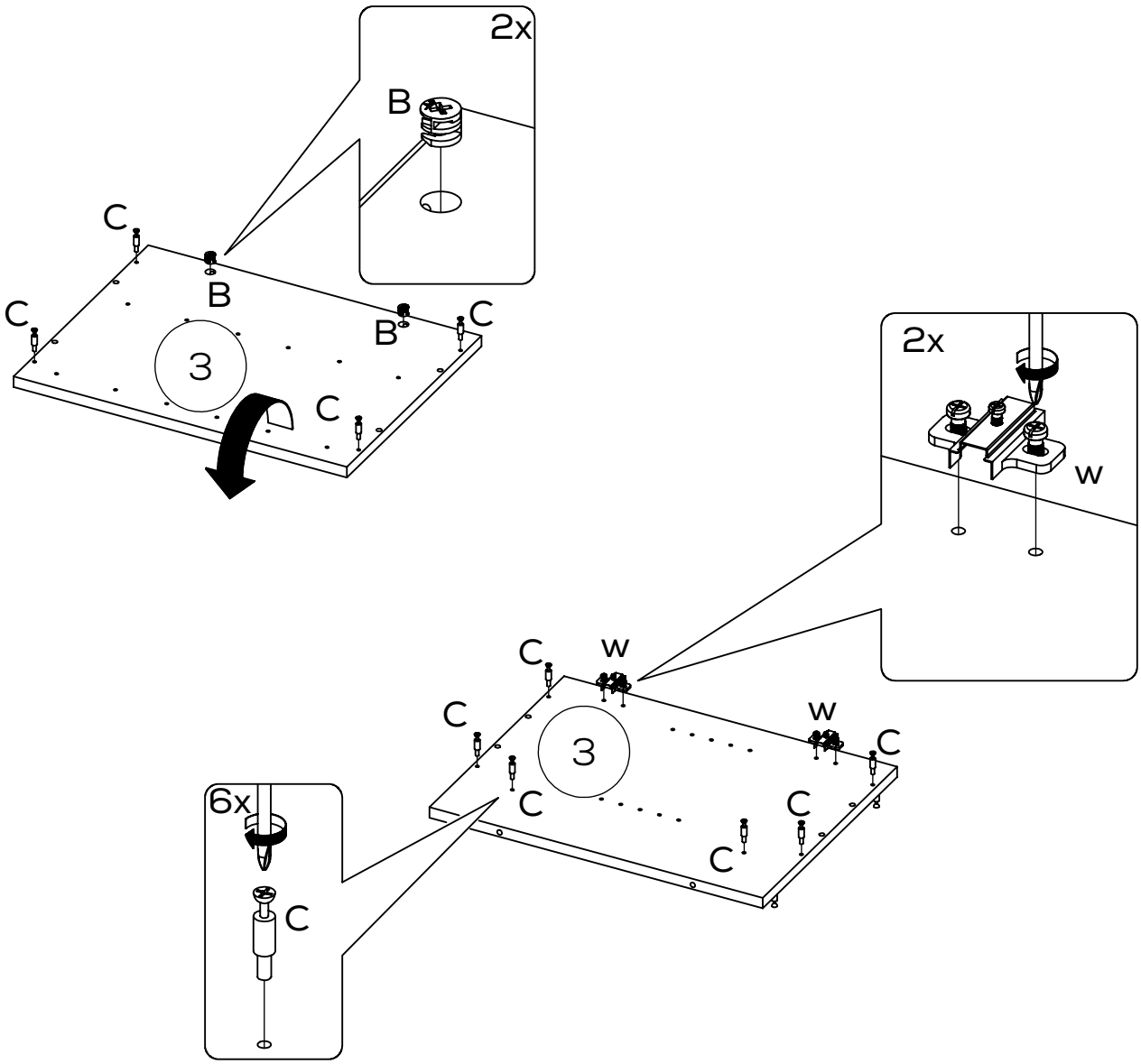

4

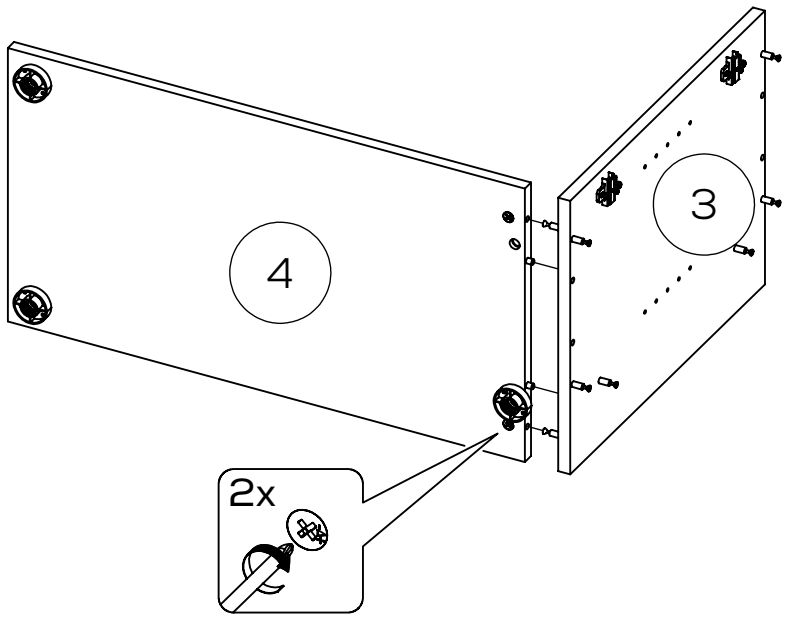

5

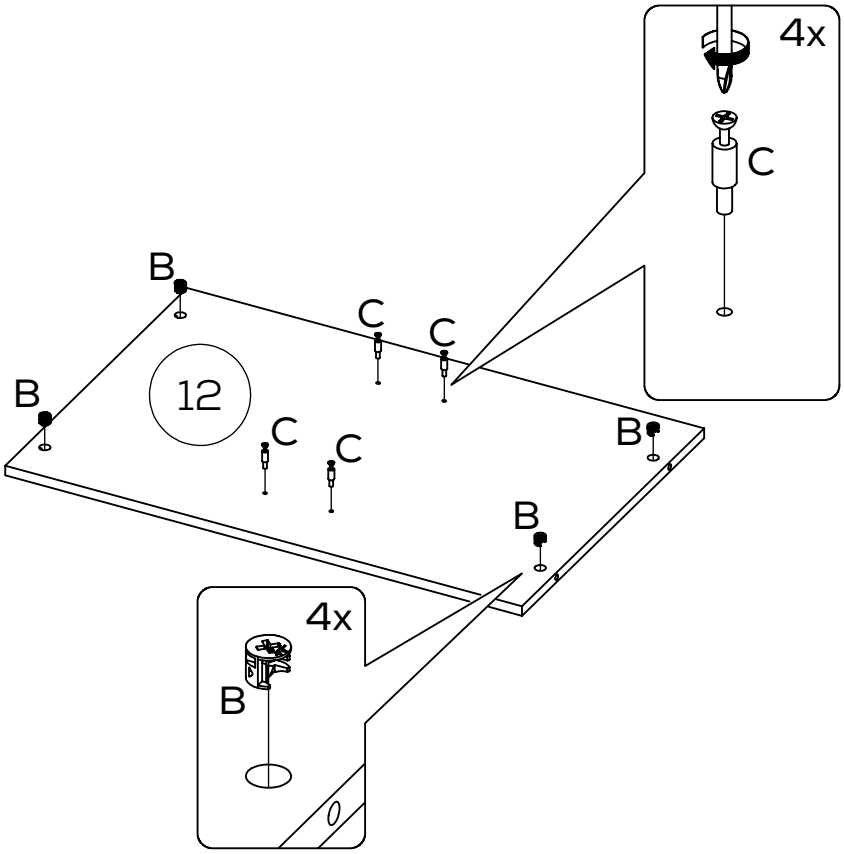

6

2x

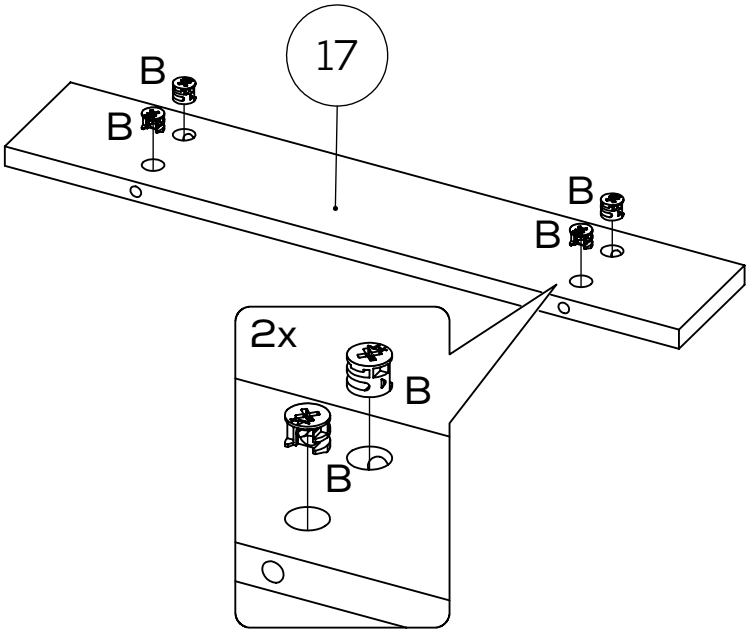

7

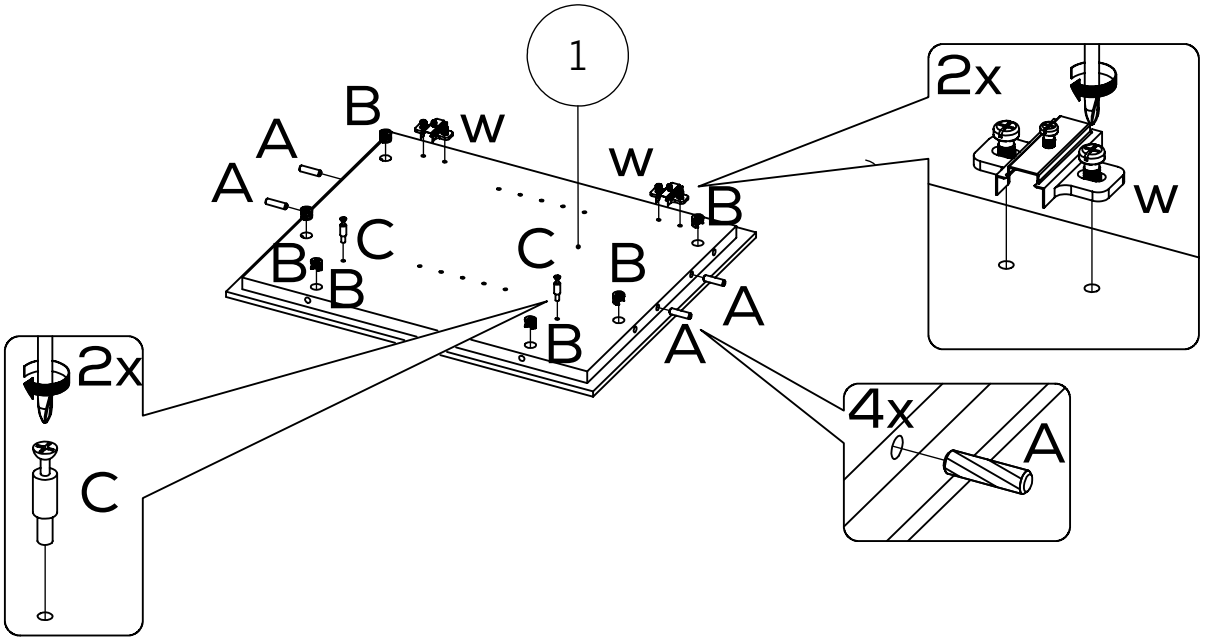

8

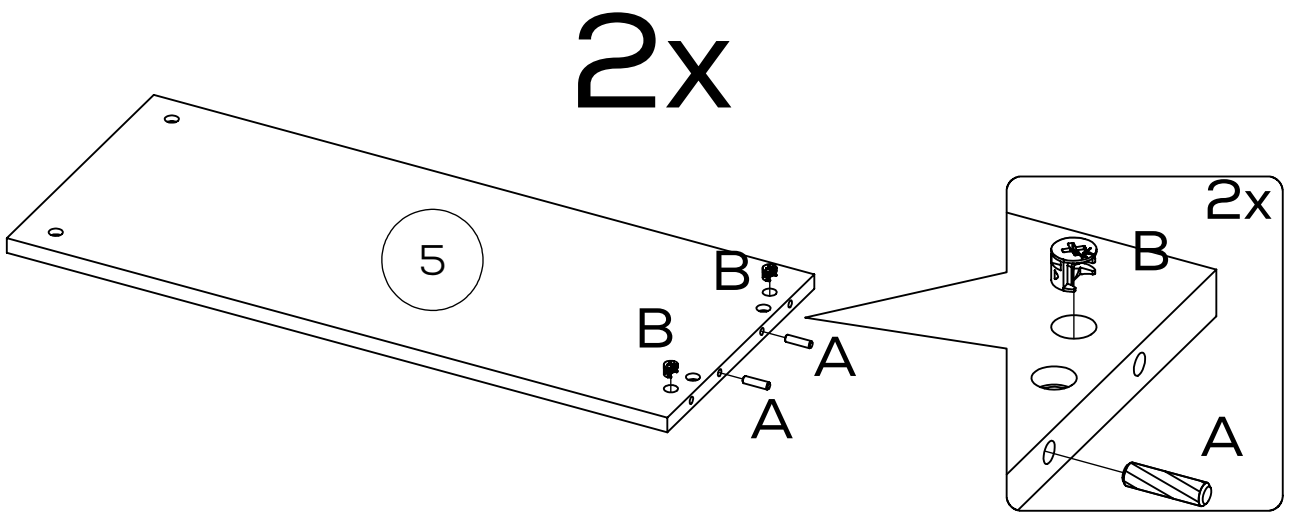

9

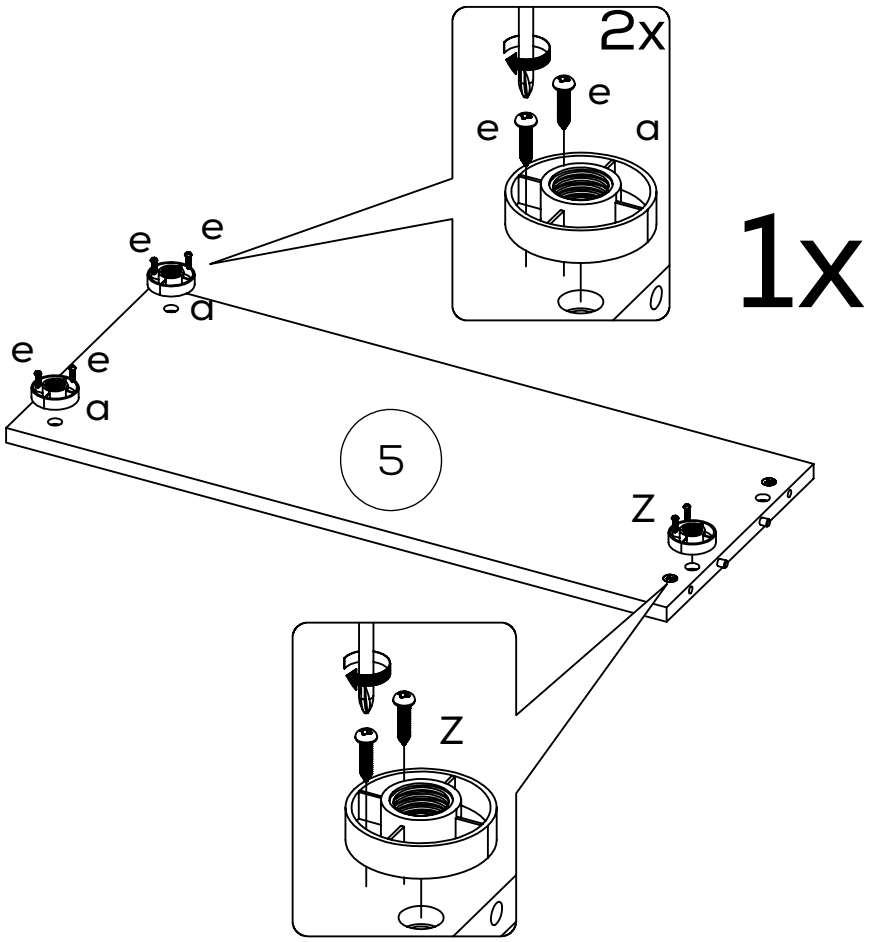

10

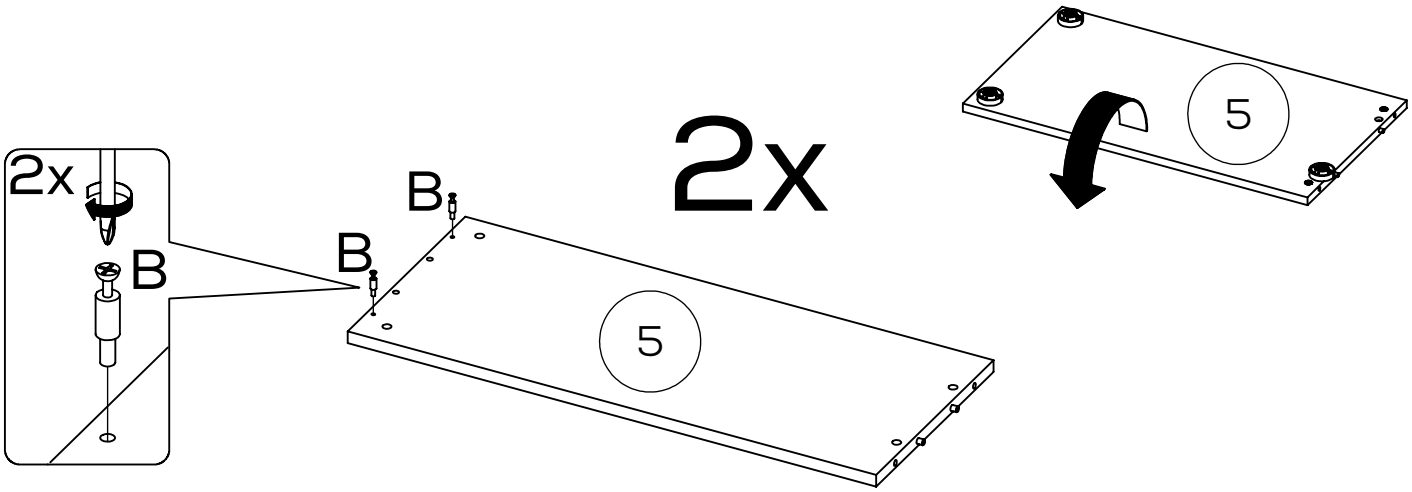

11

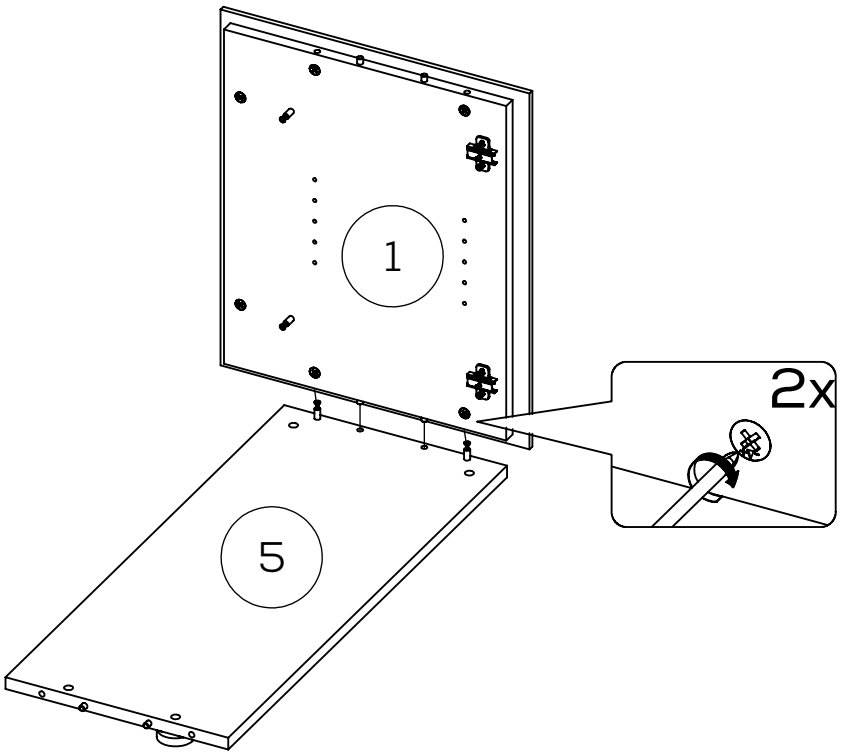

12

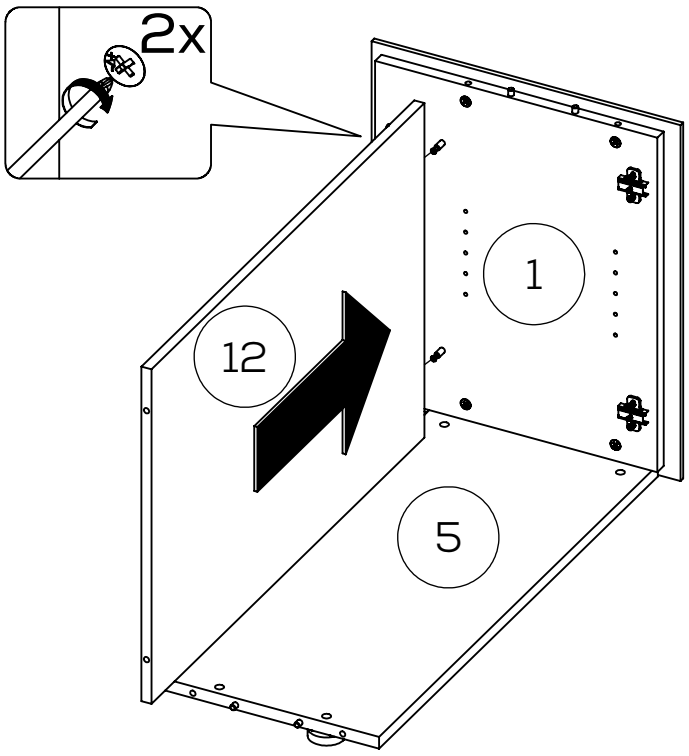

13

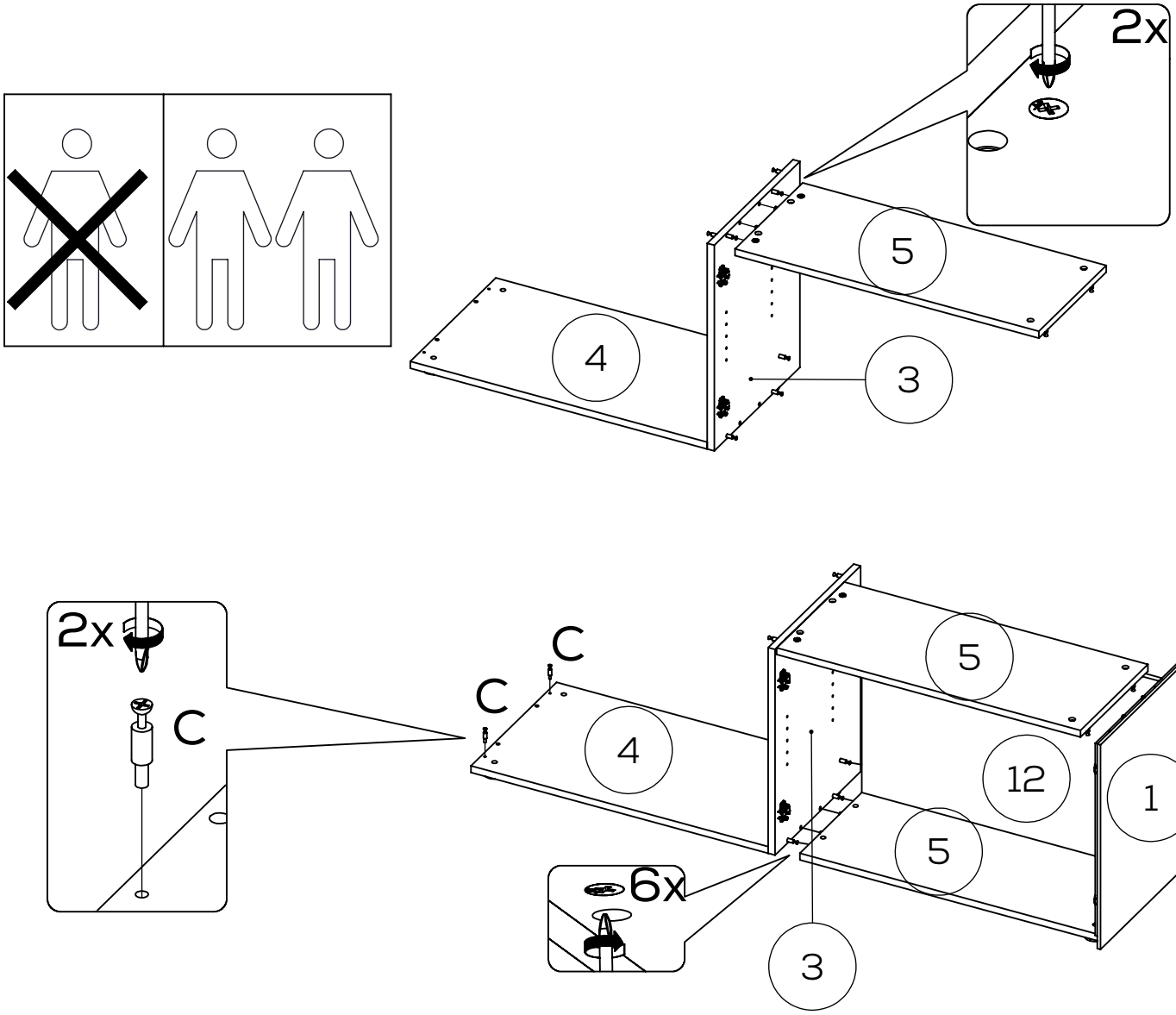

14

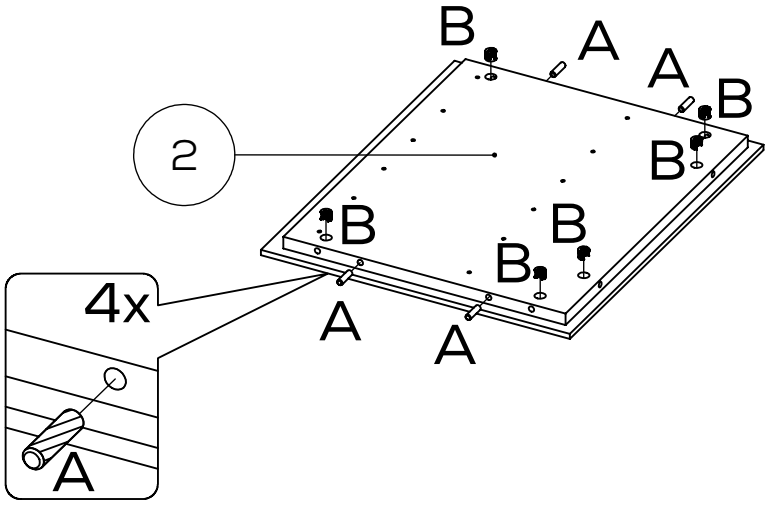

15

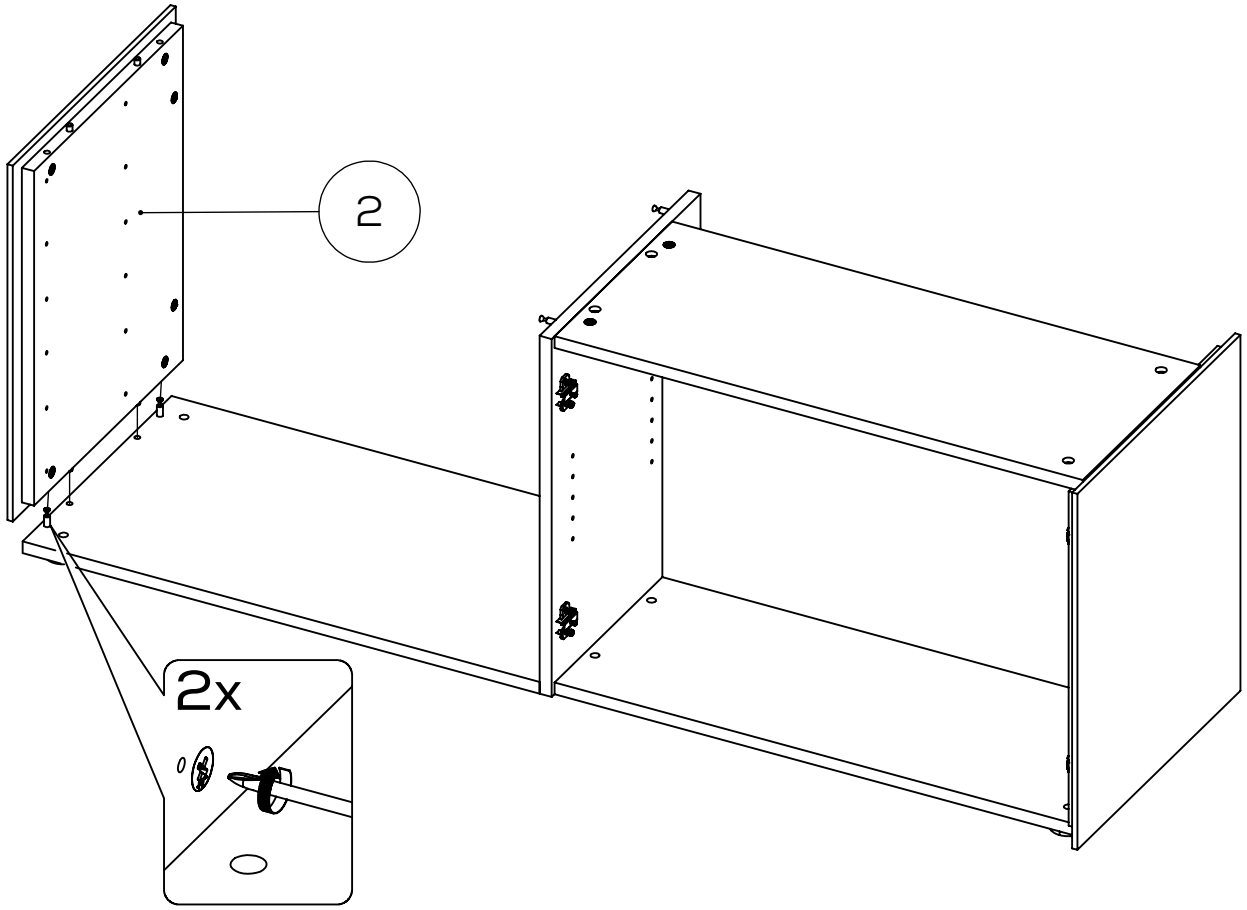

16

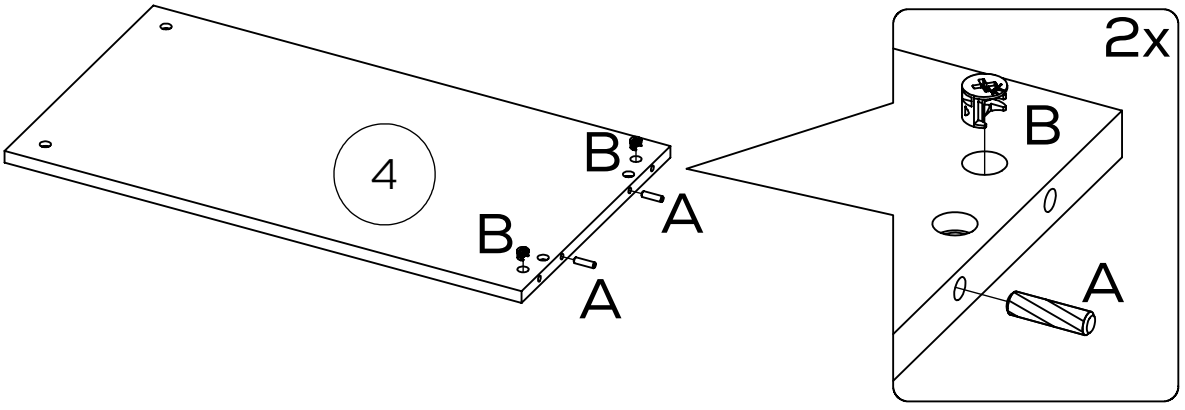

17

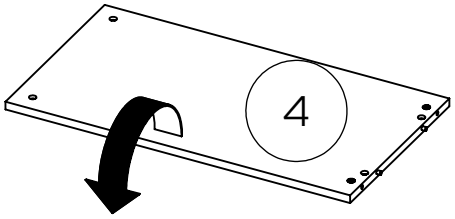

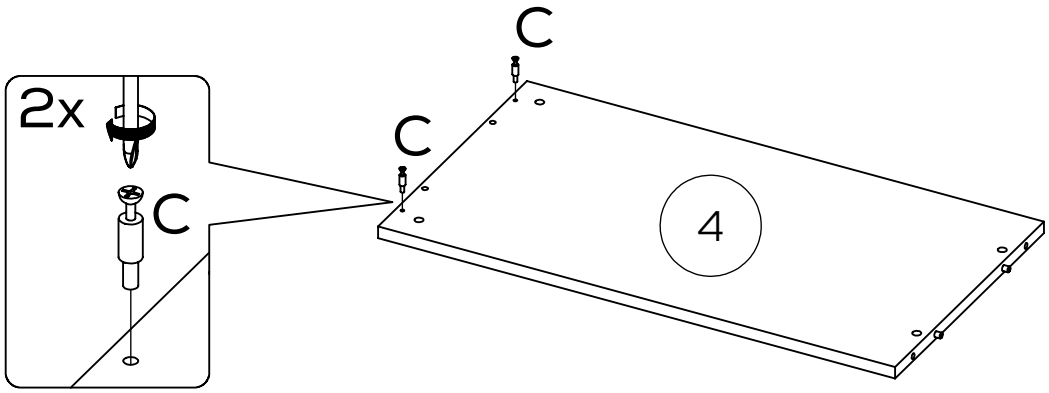

18

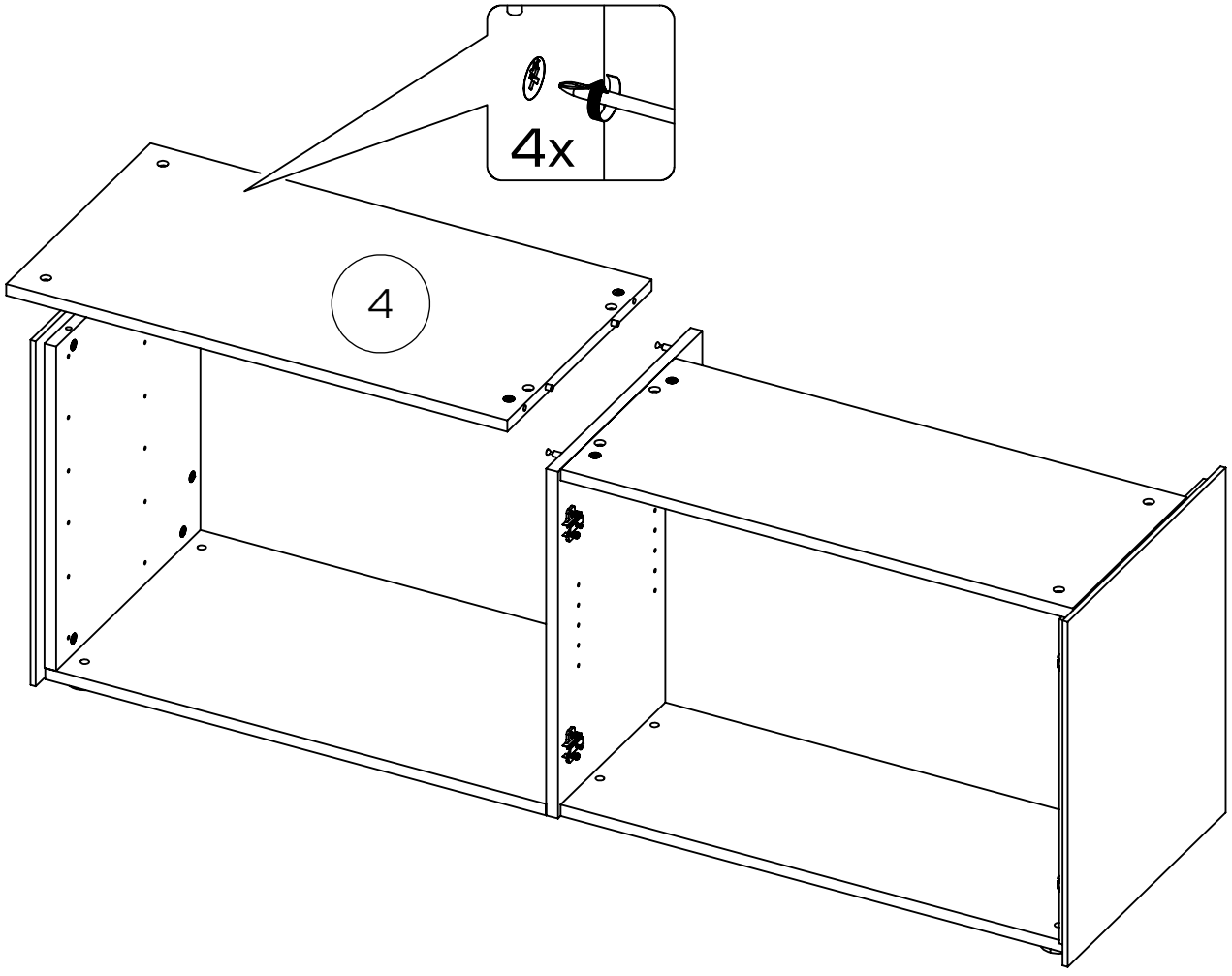

19

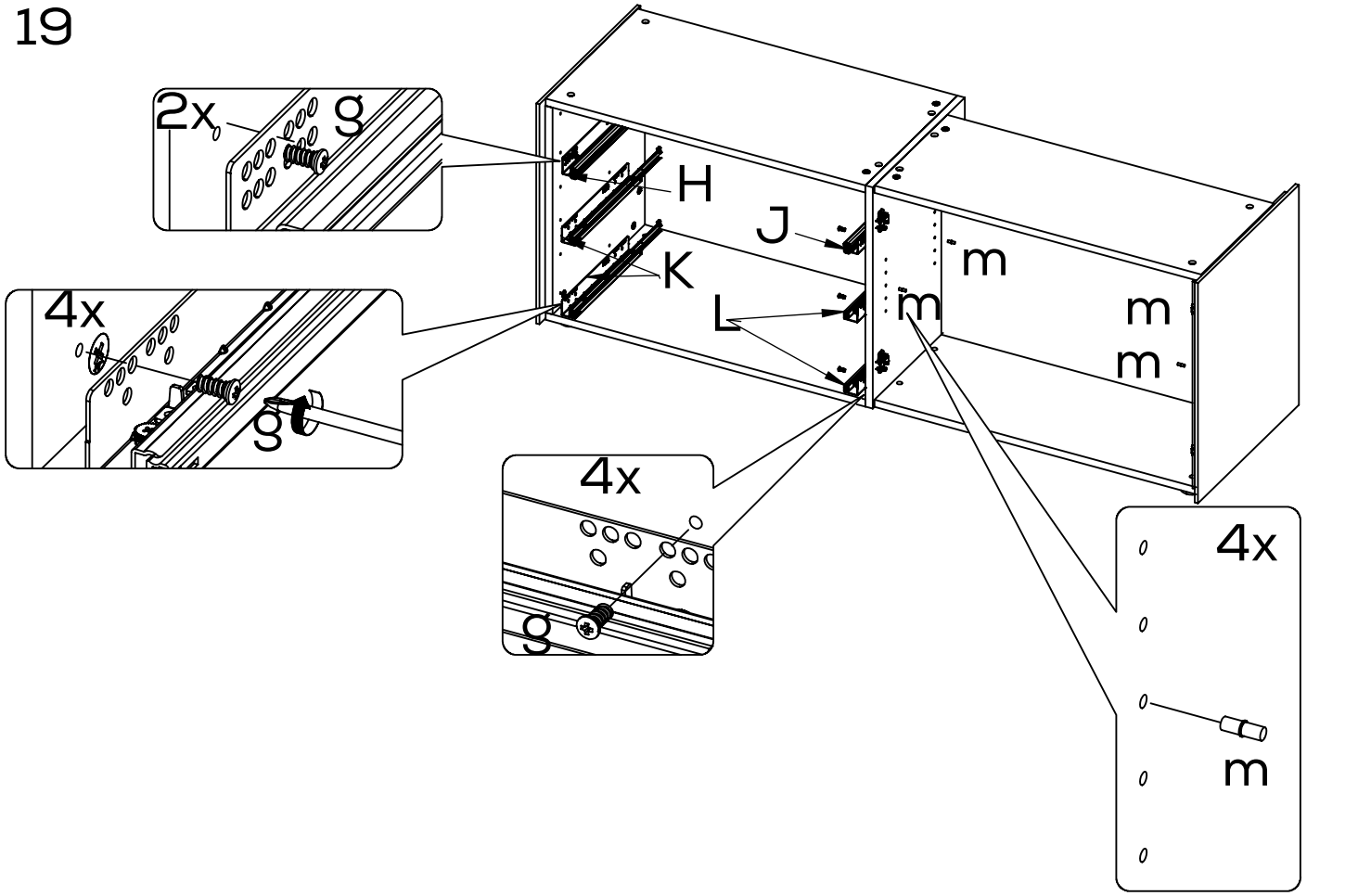

20

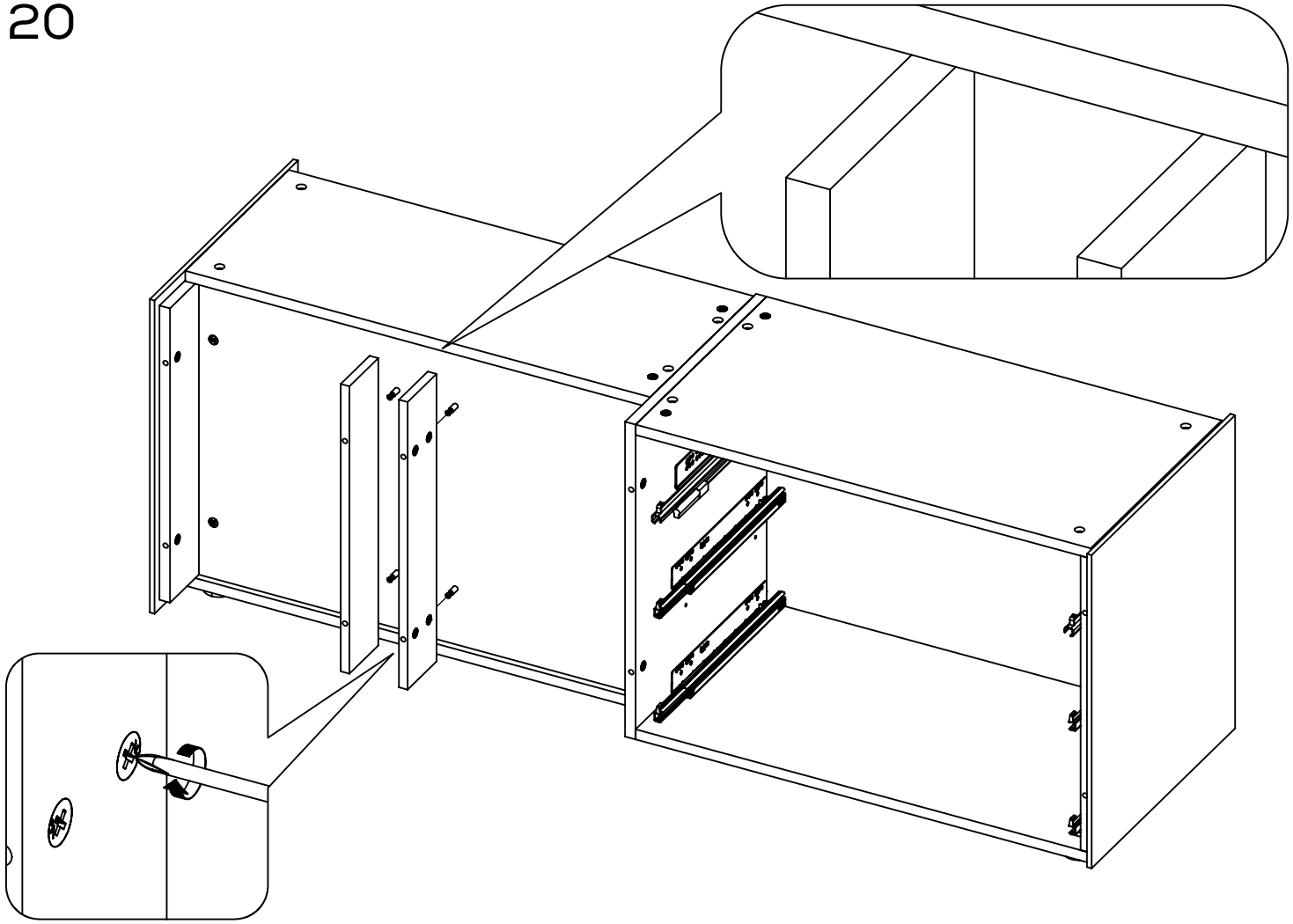

21

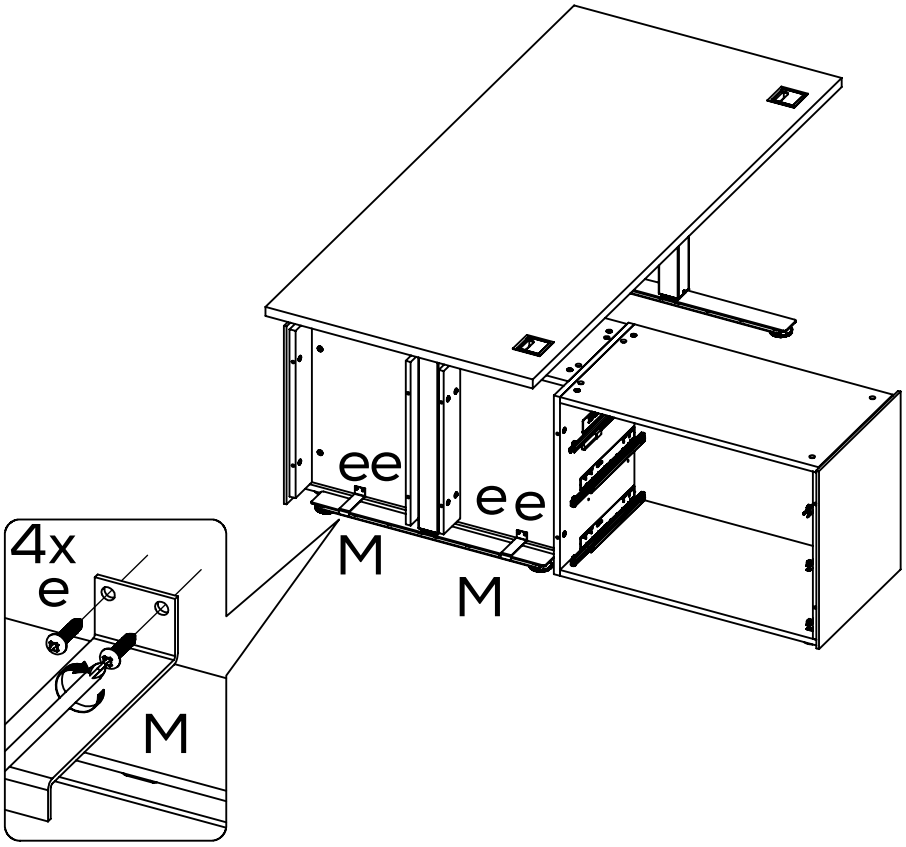

22

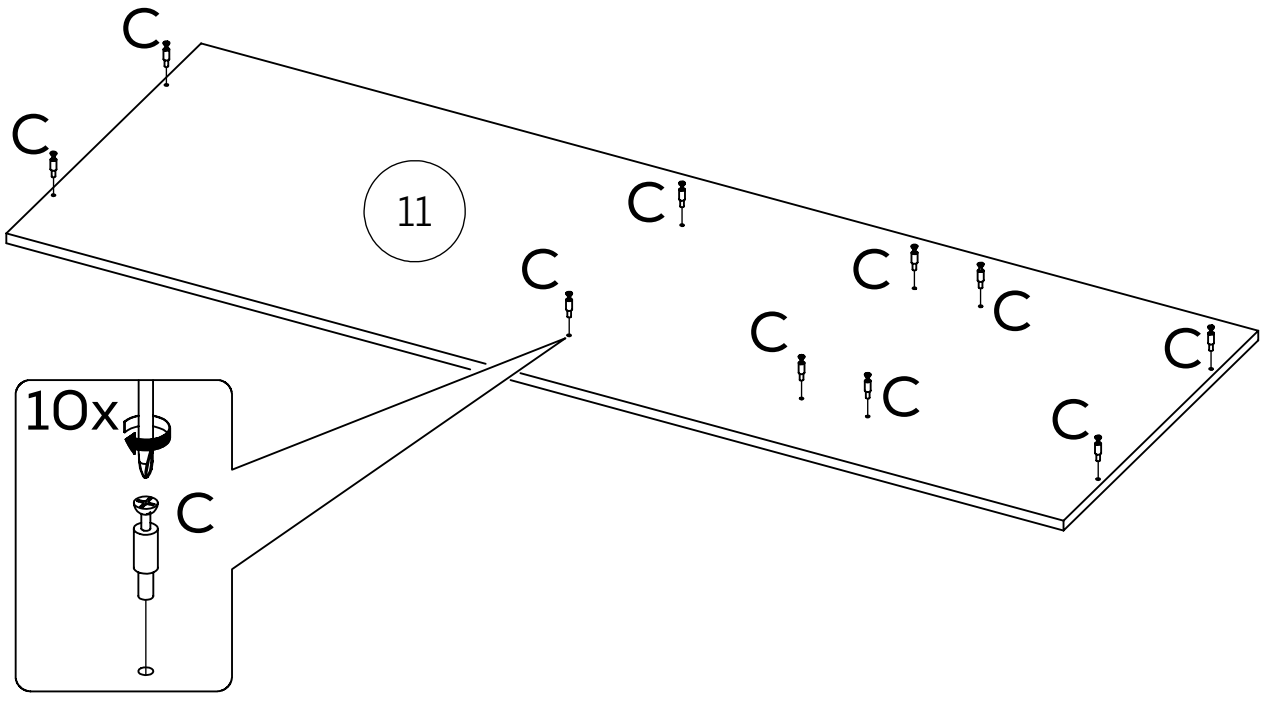

23

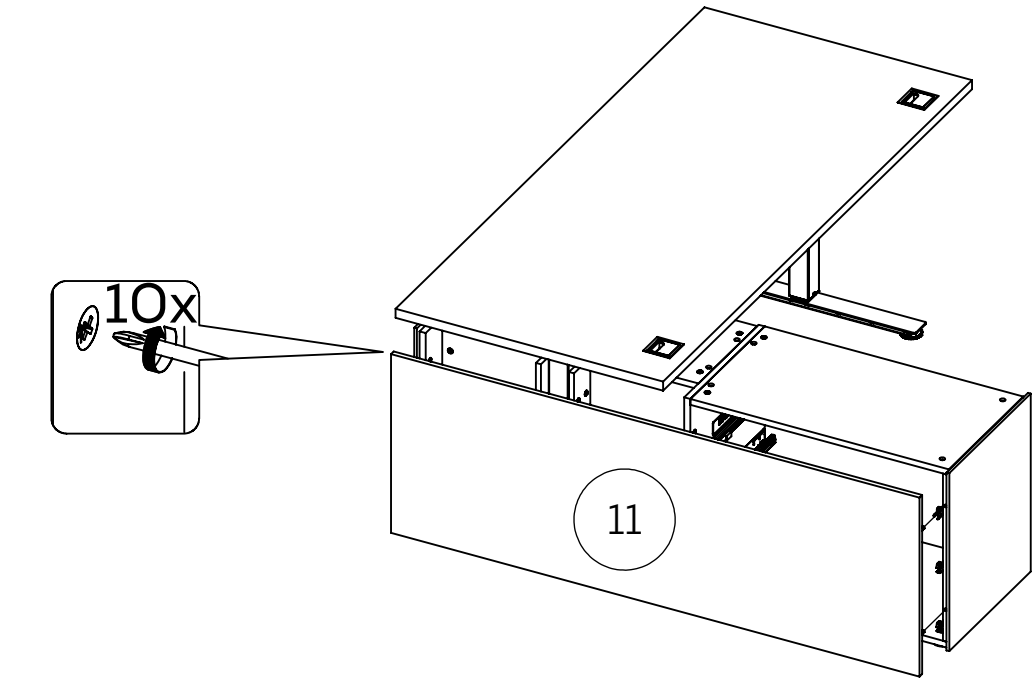

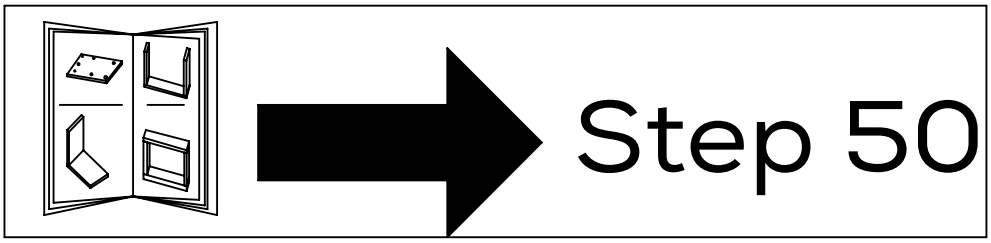

24

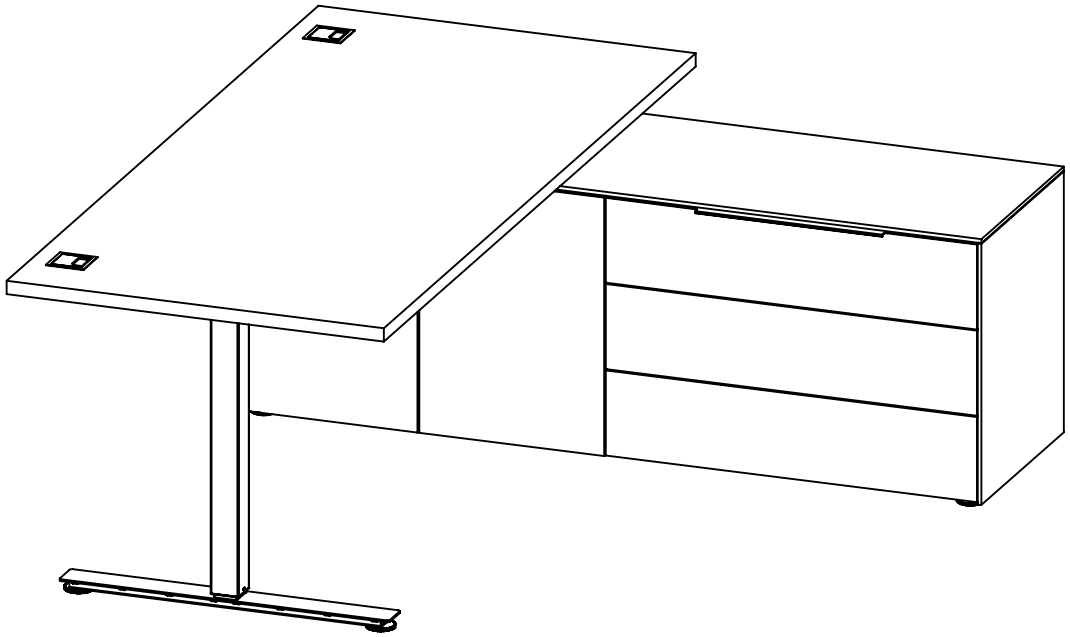

25

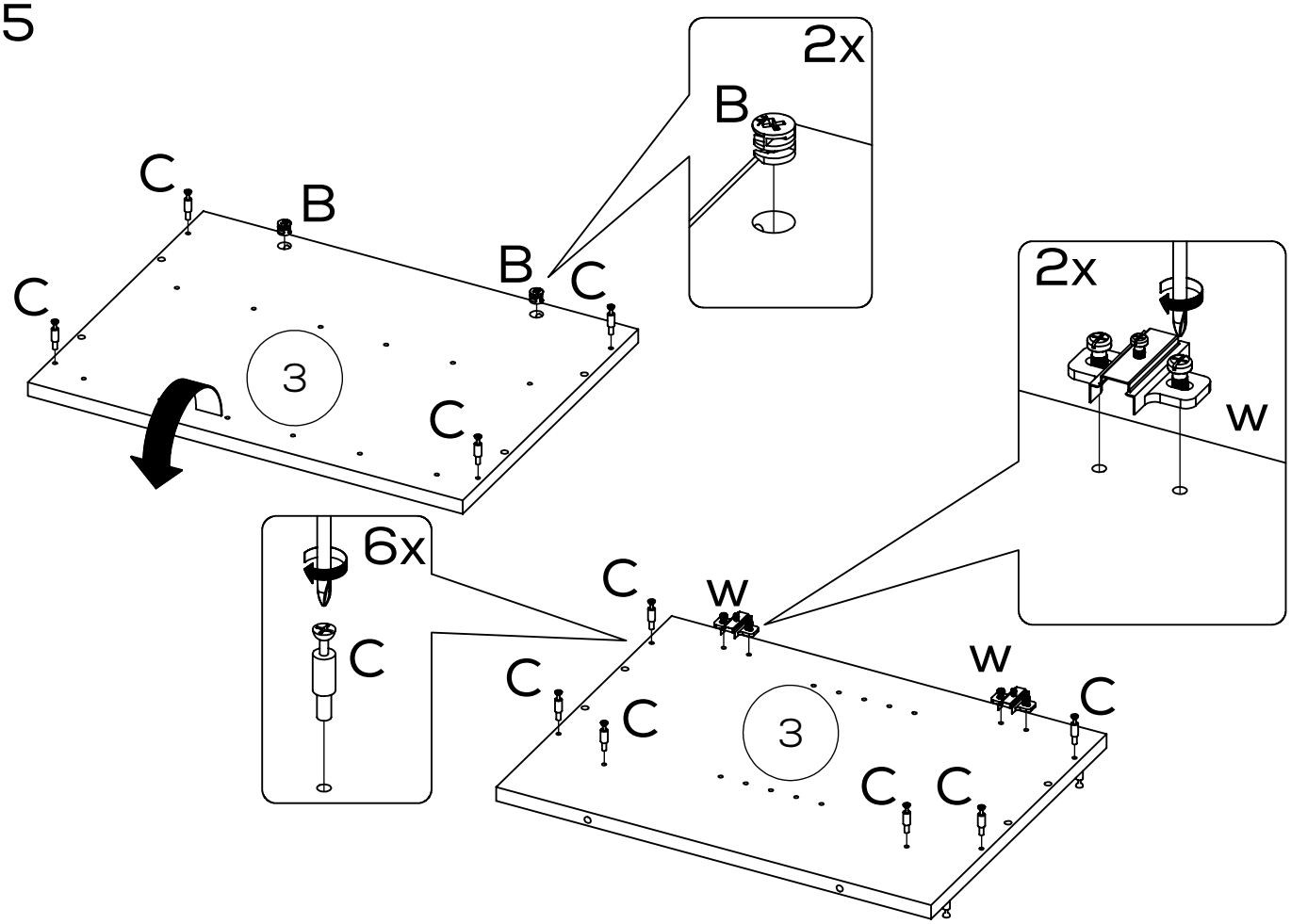

26

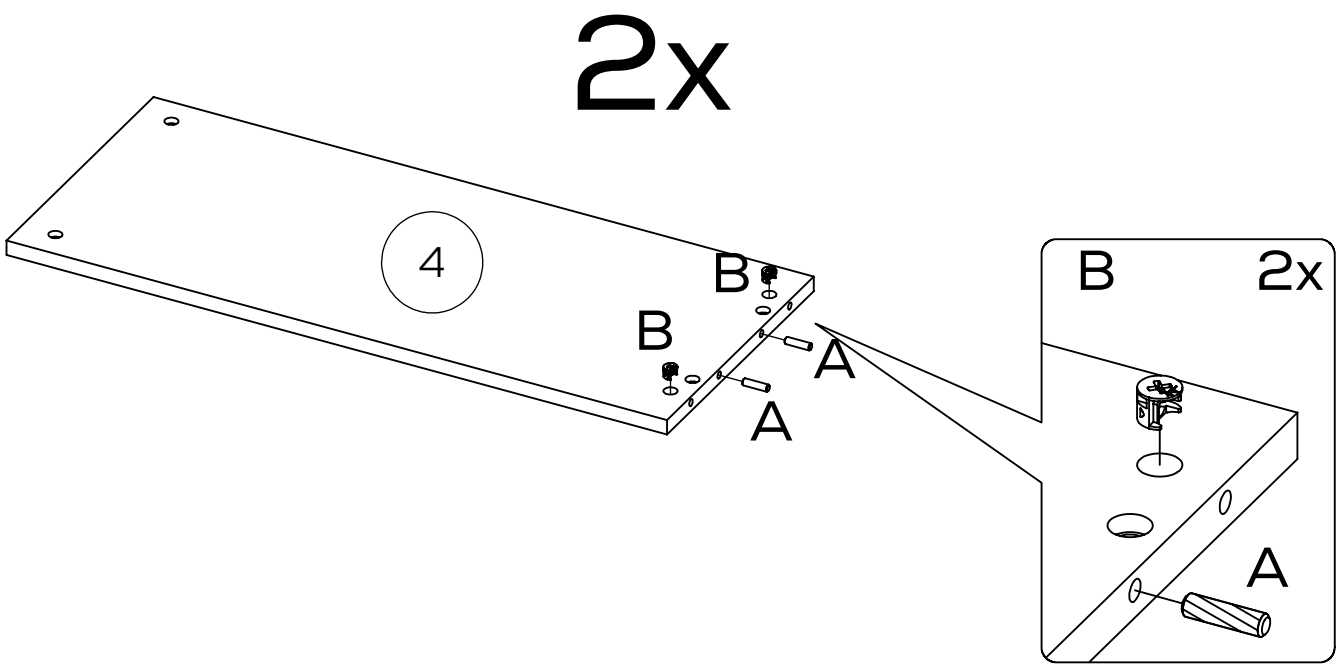

27

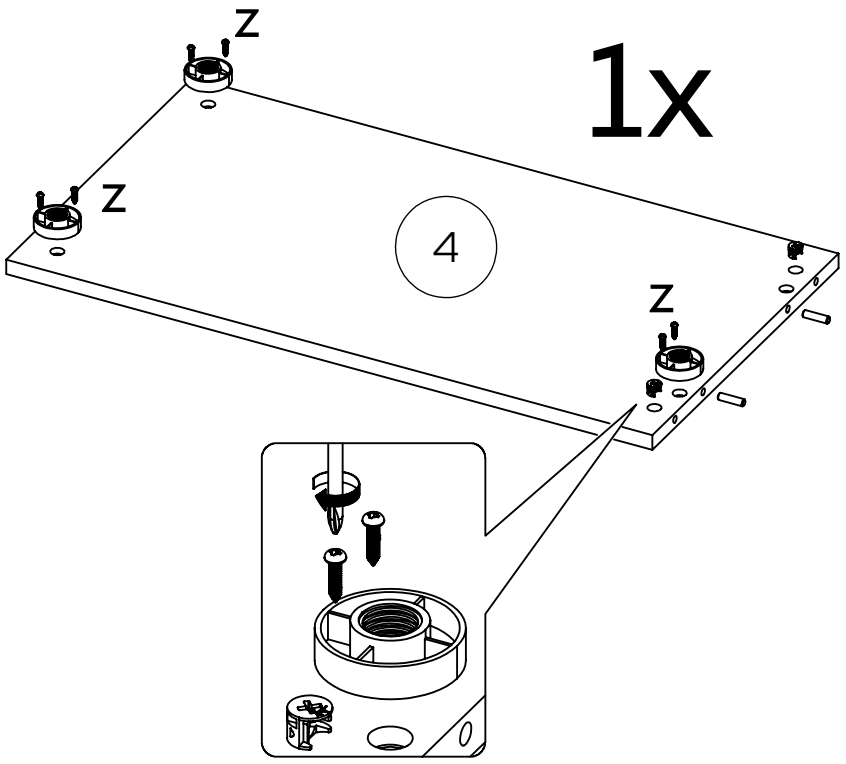

28

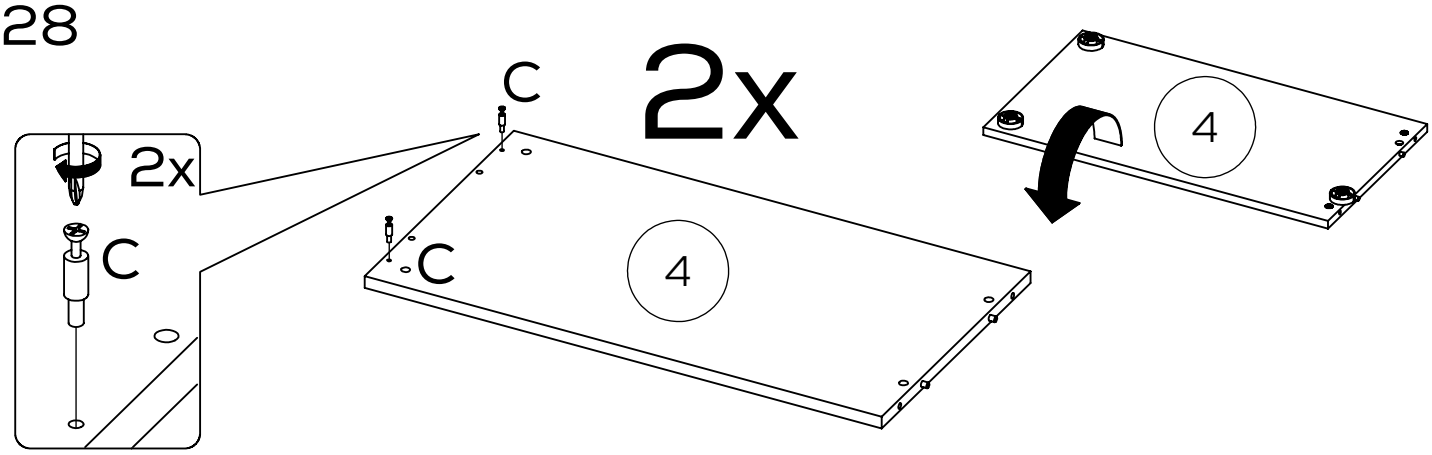

29

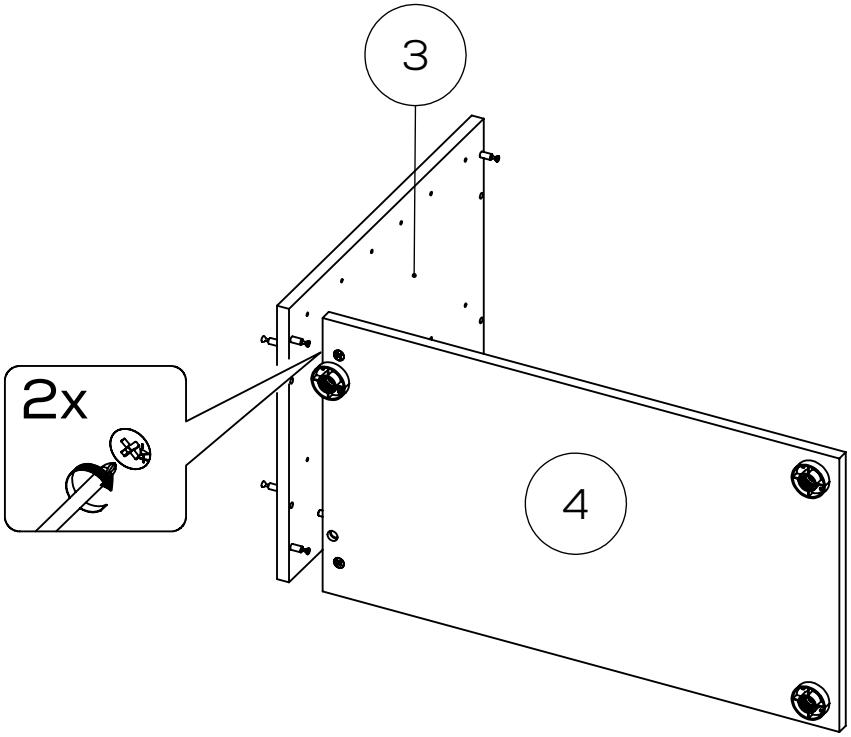

30

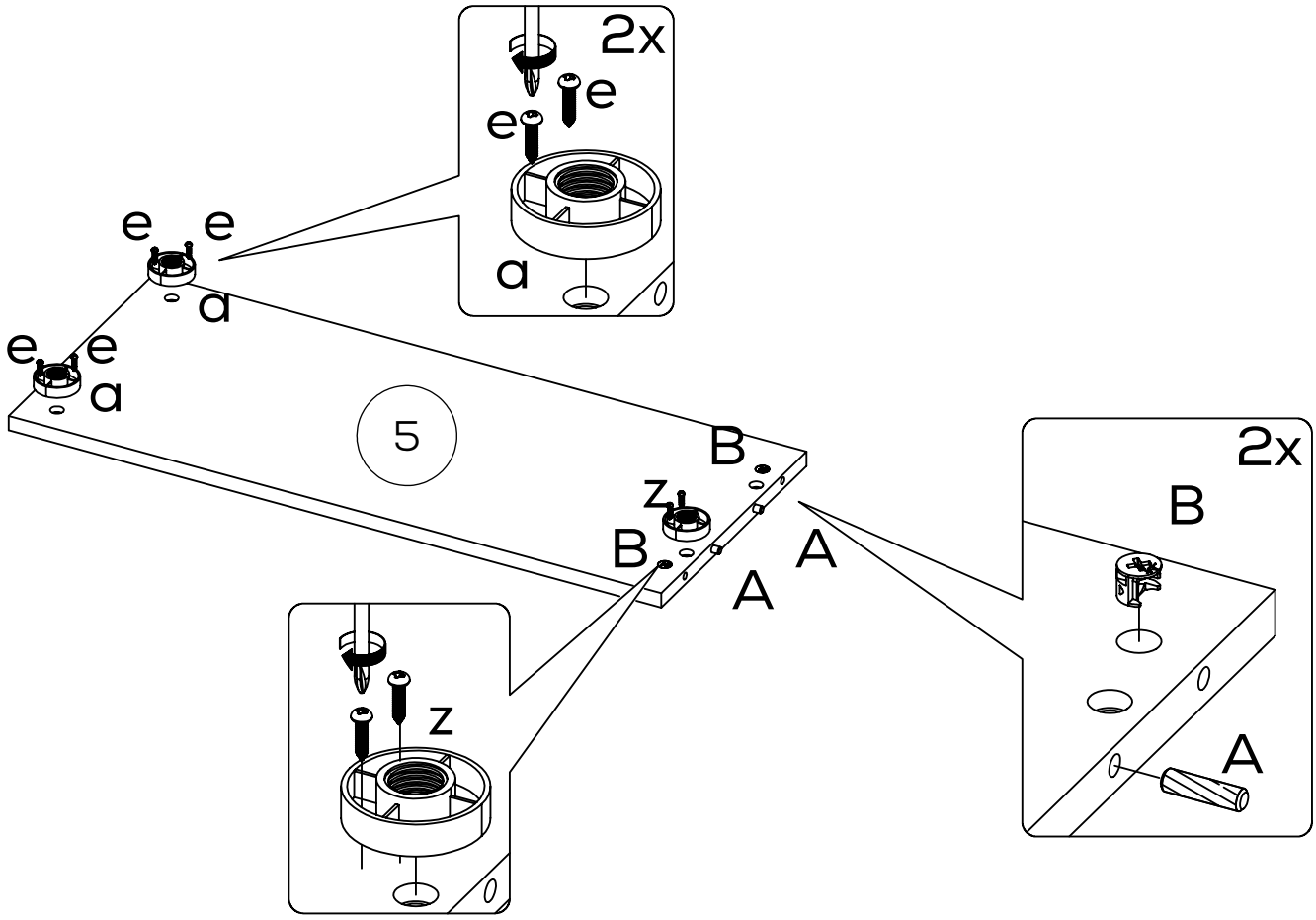

31

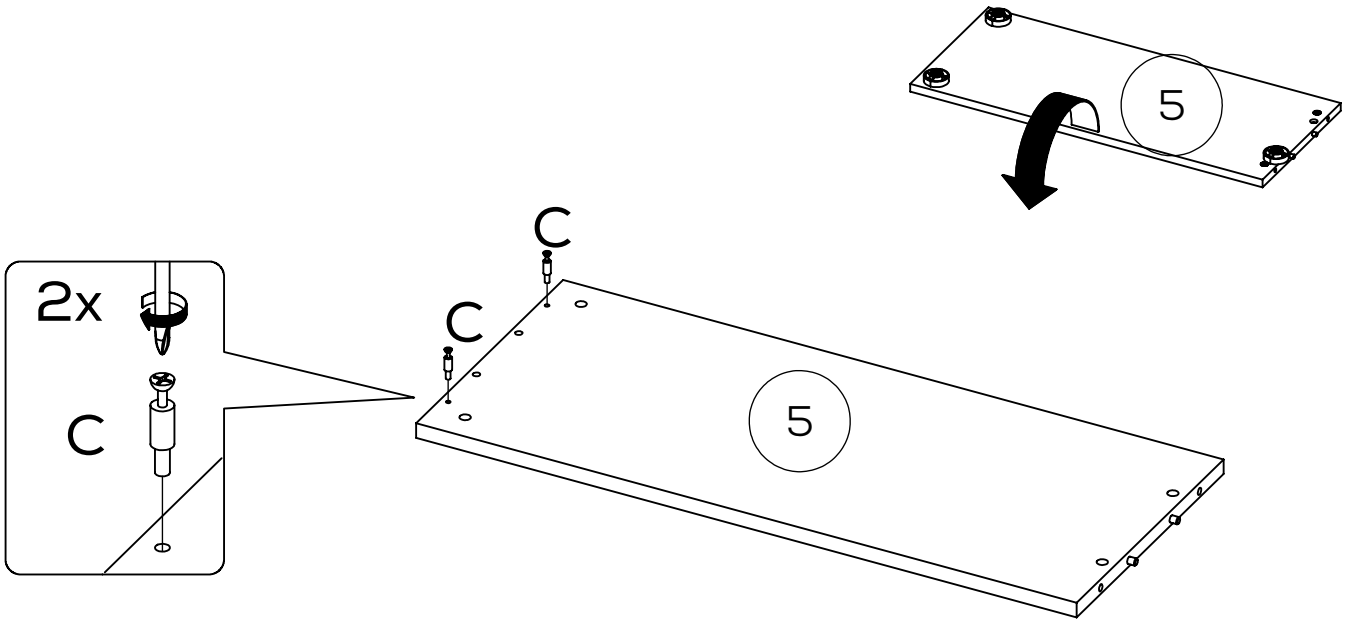

32

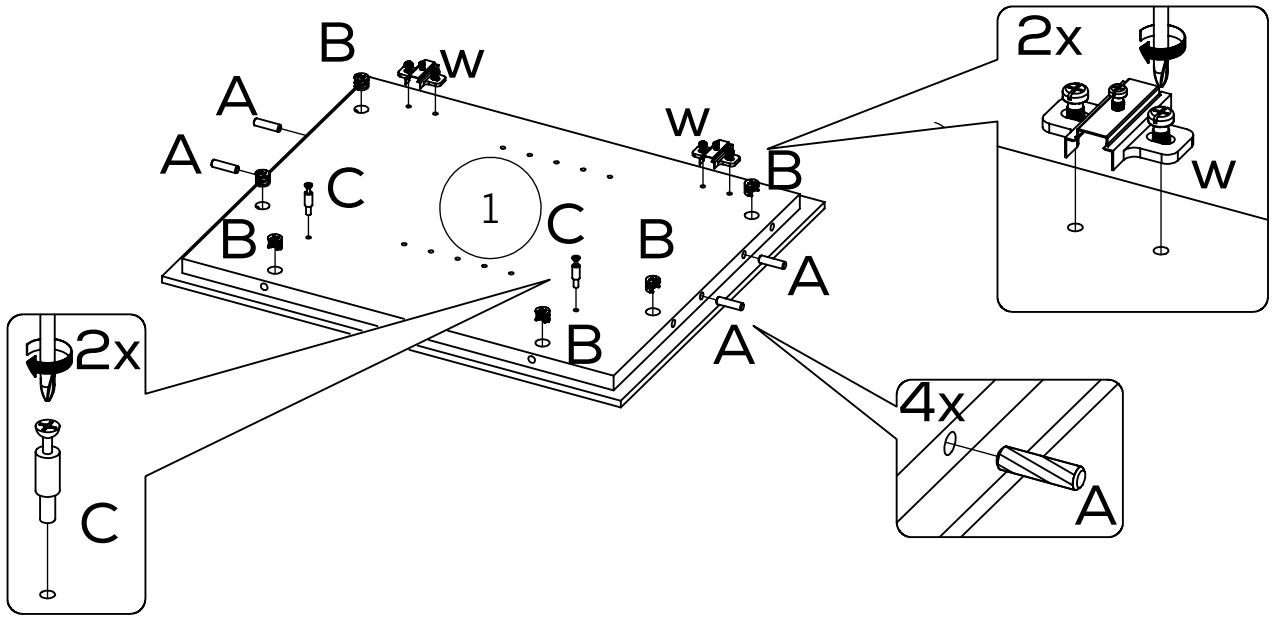

33

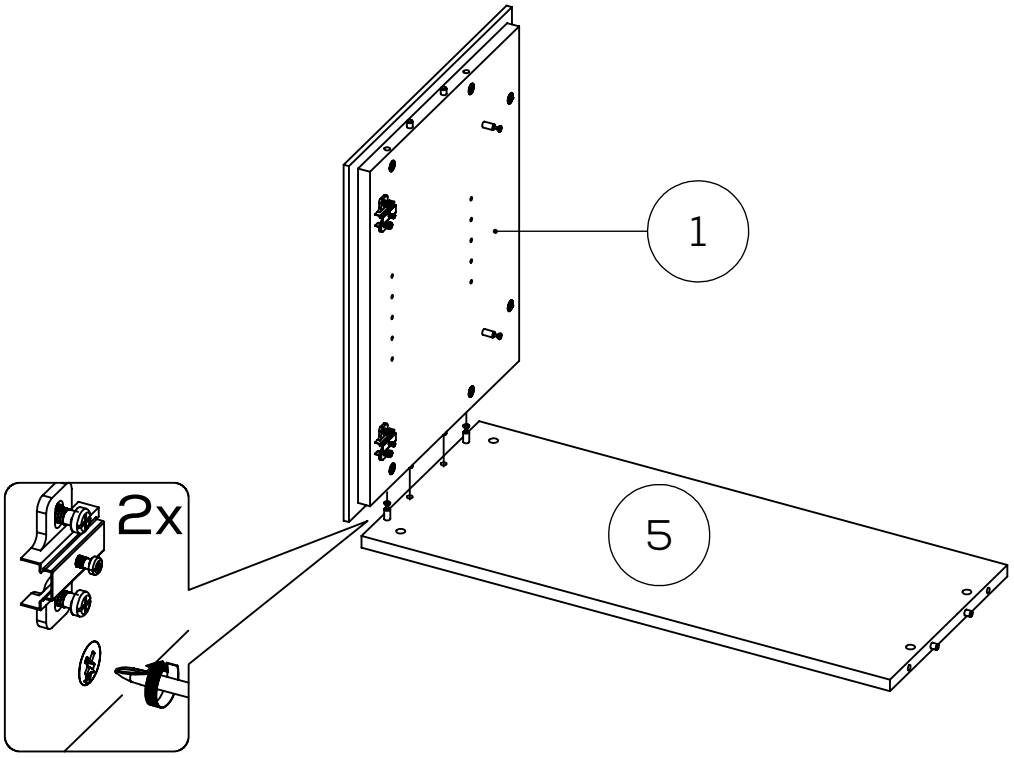

34

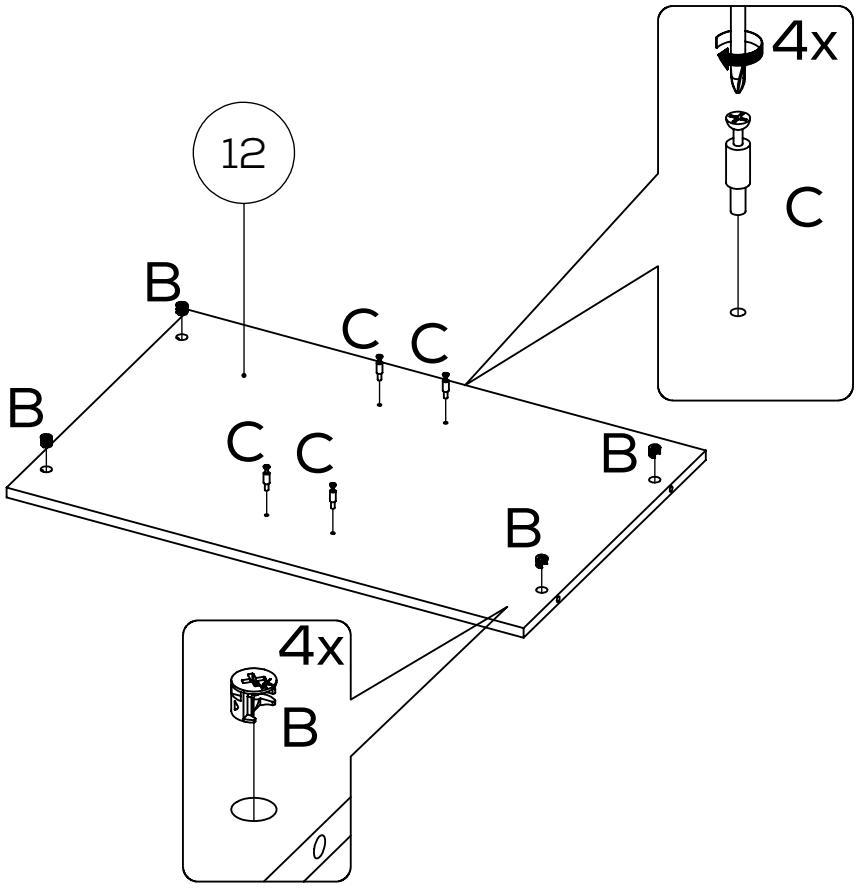

35

2x

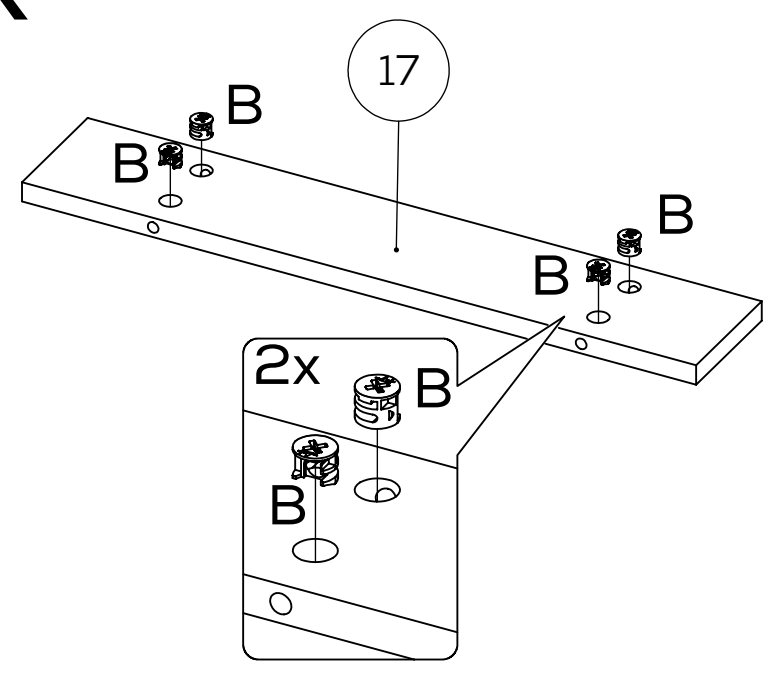

36

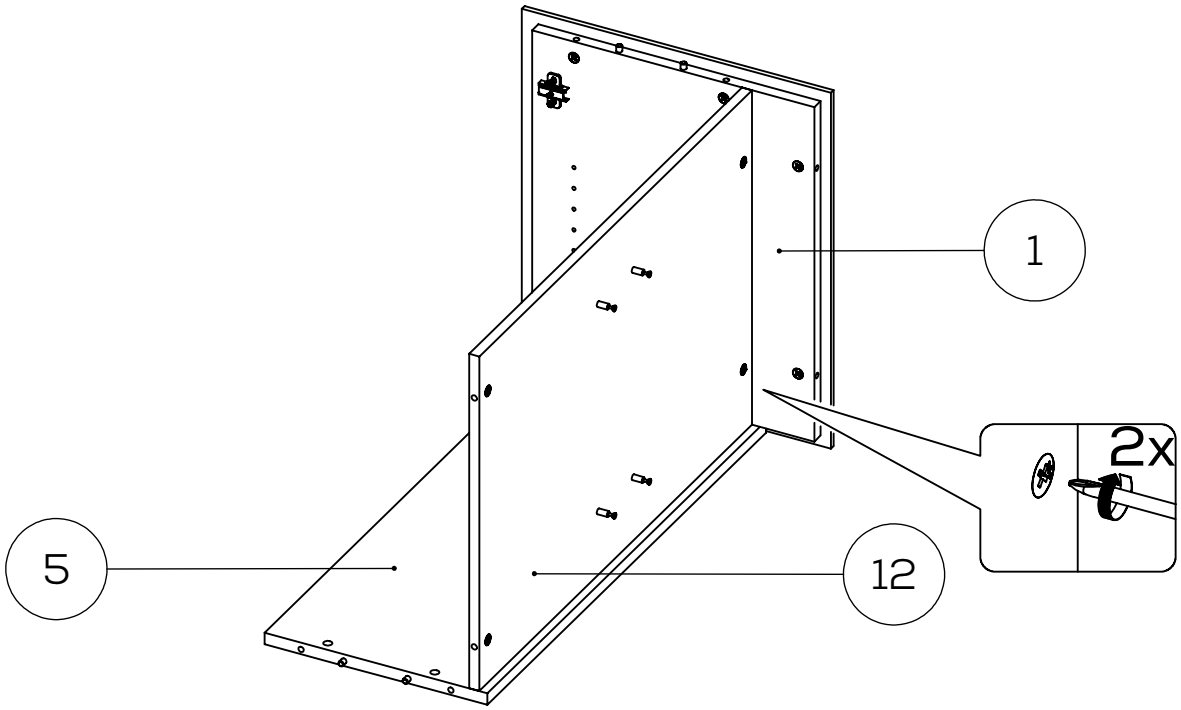

37

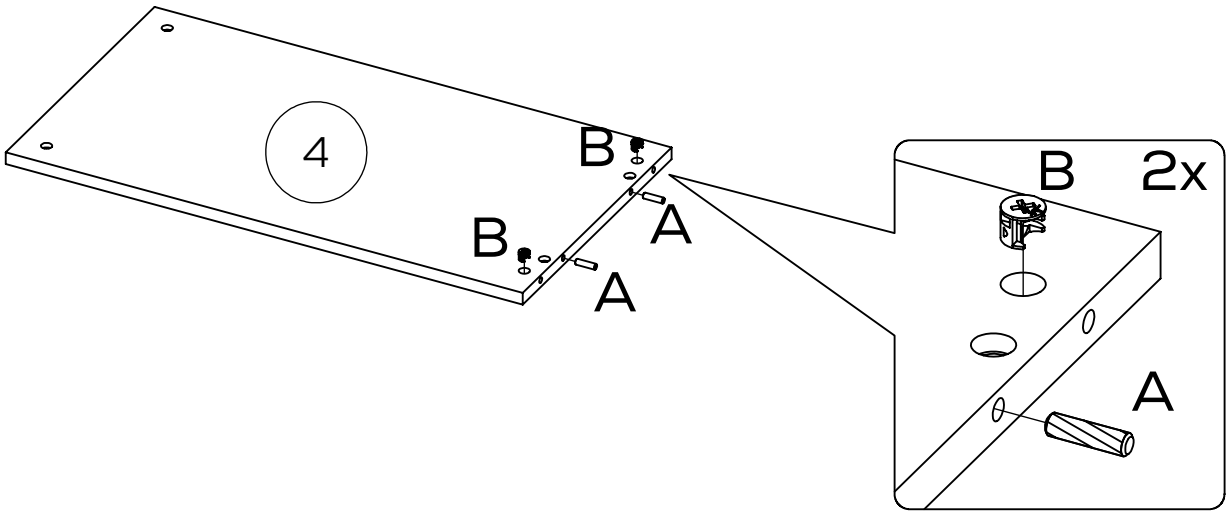

38

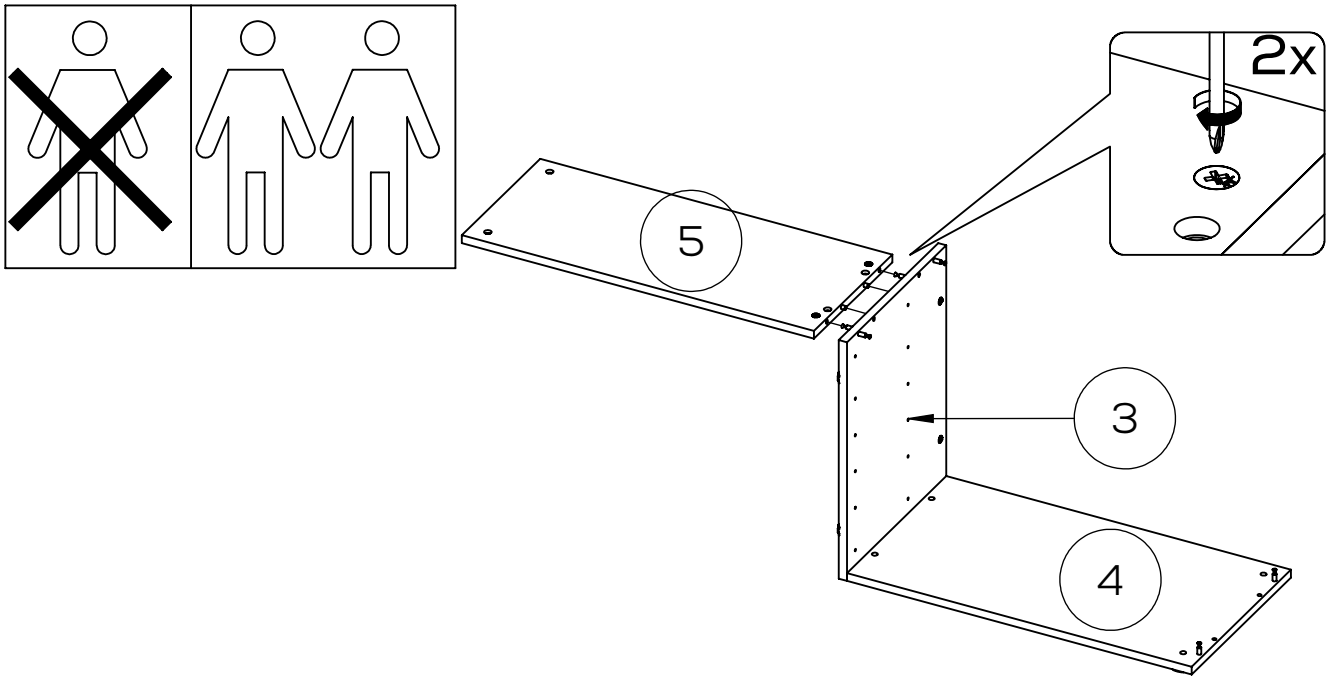

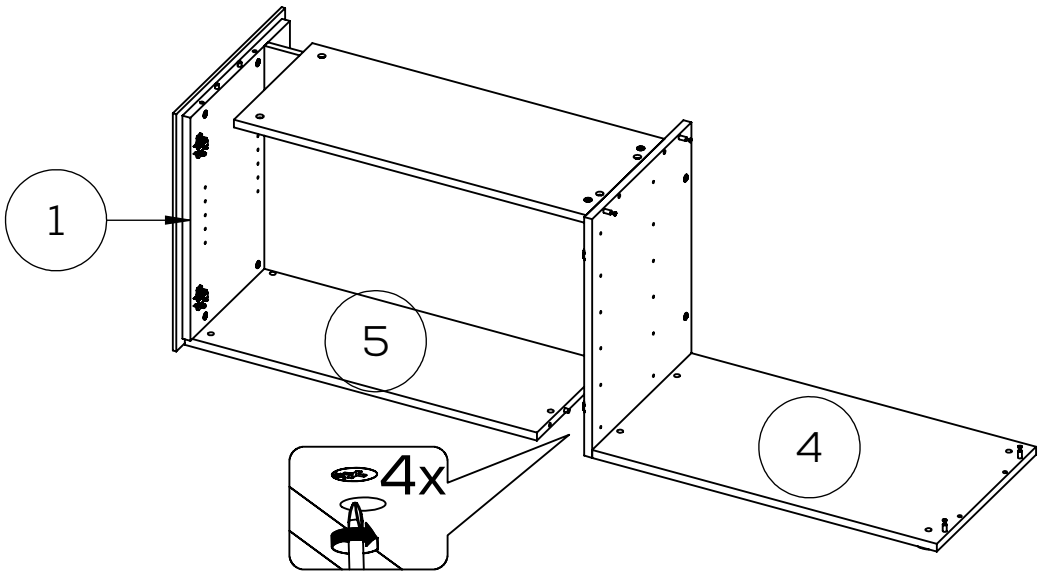

39

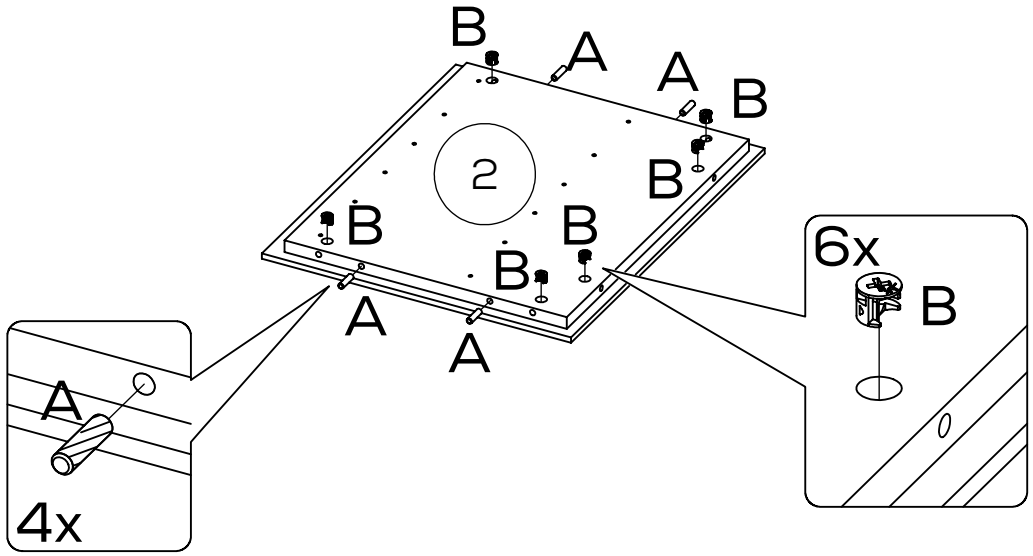

40

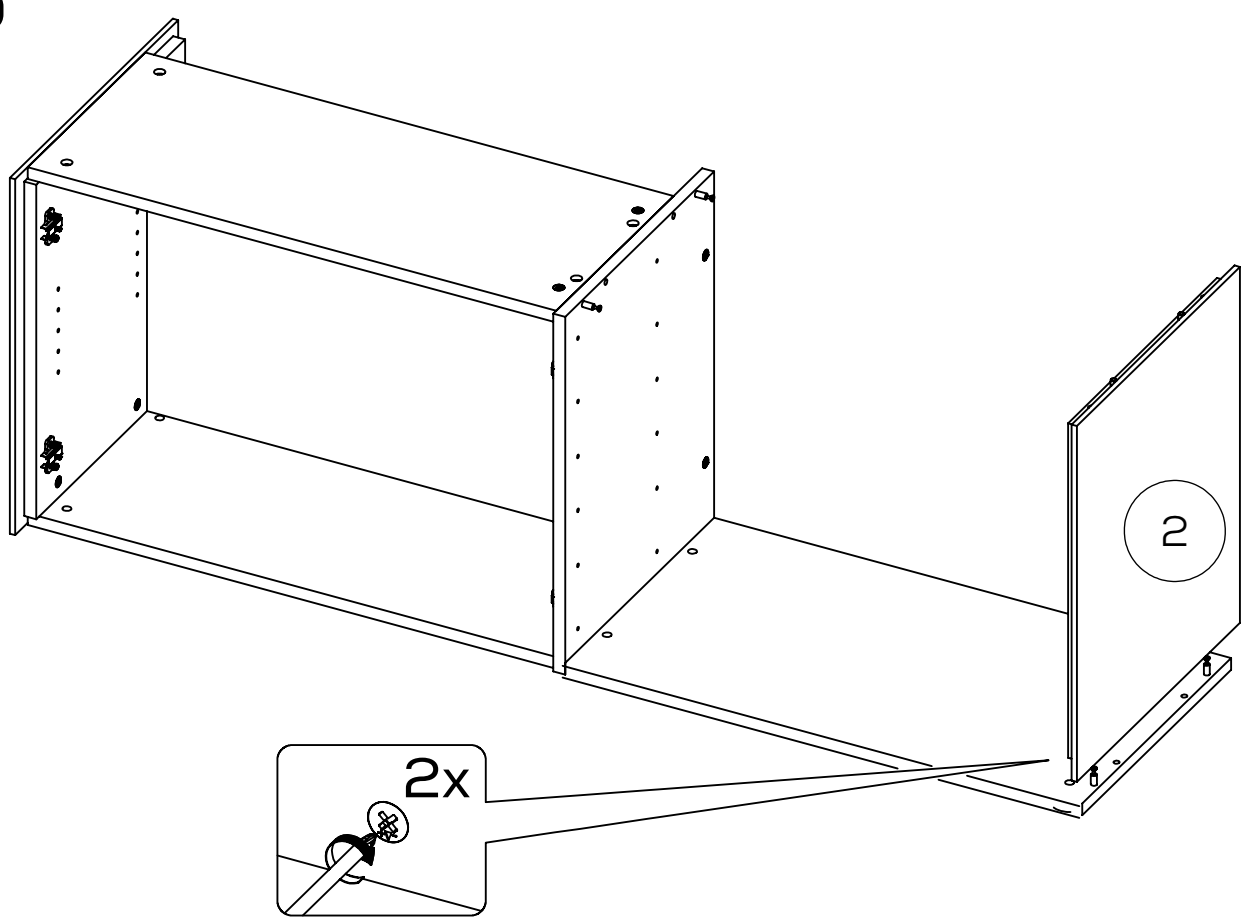

41

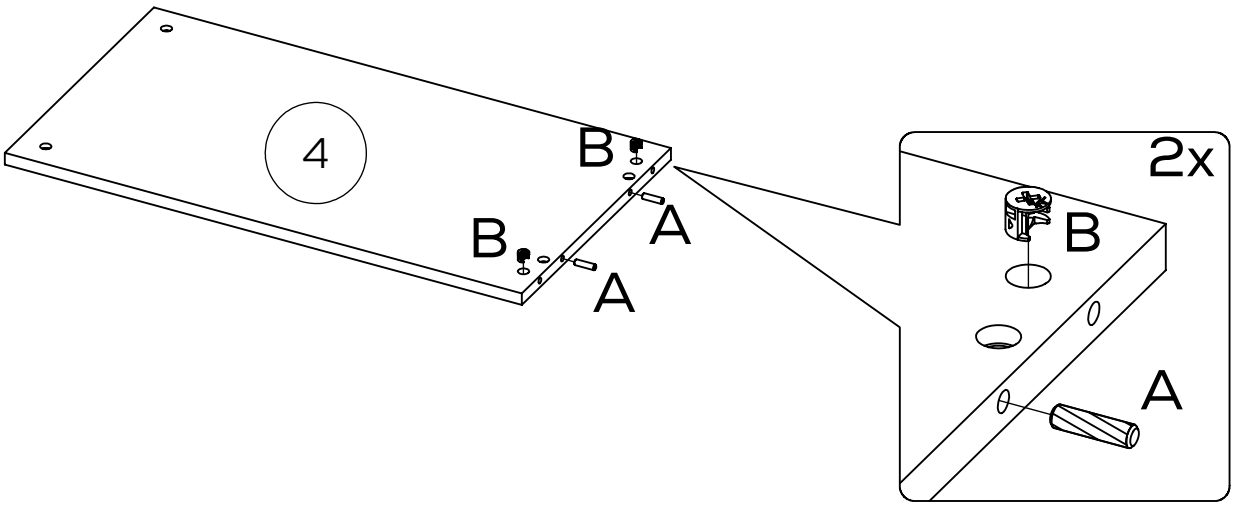

42

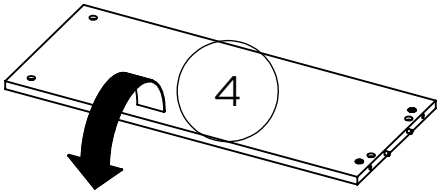

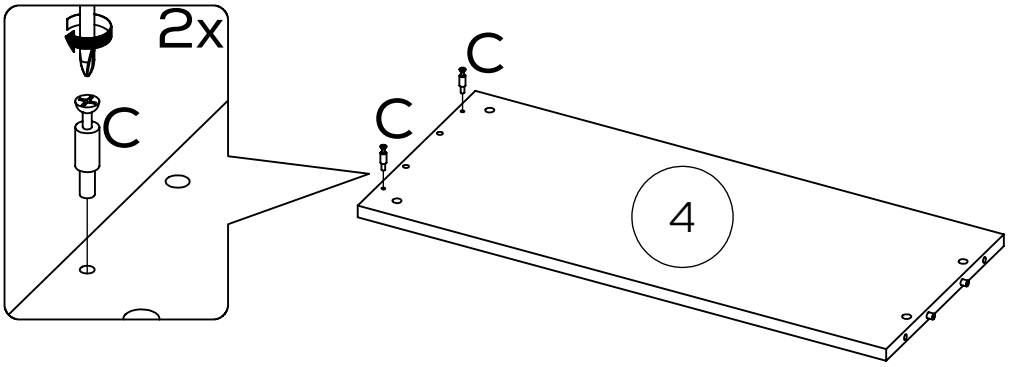

43

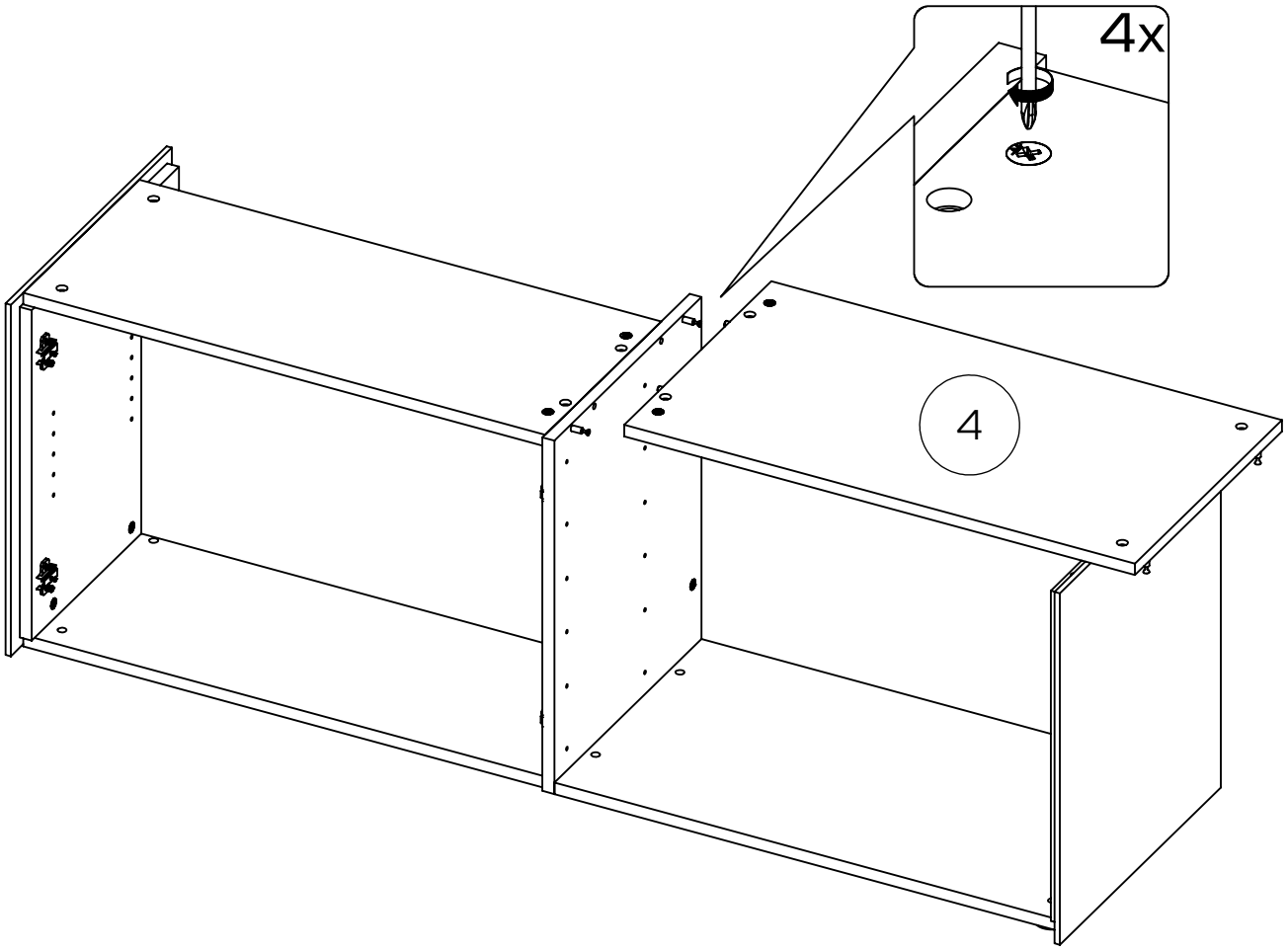

44

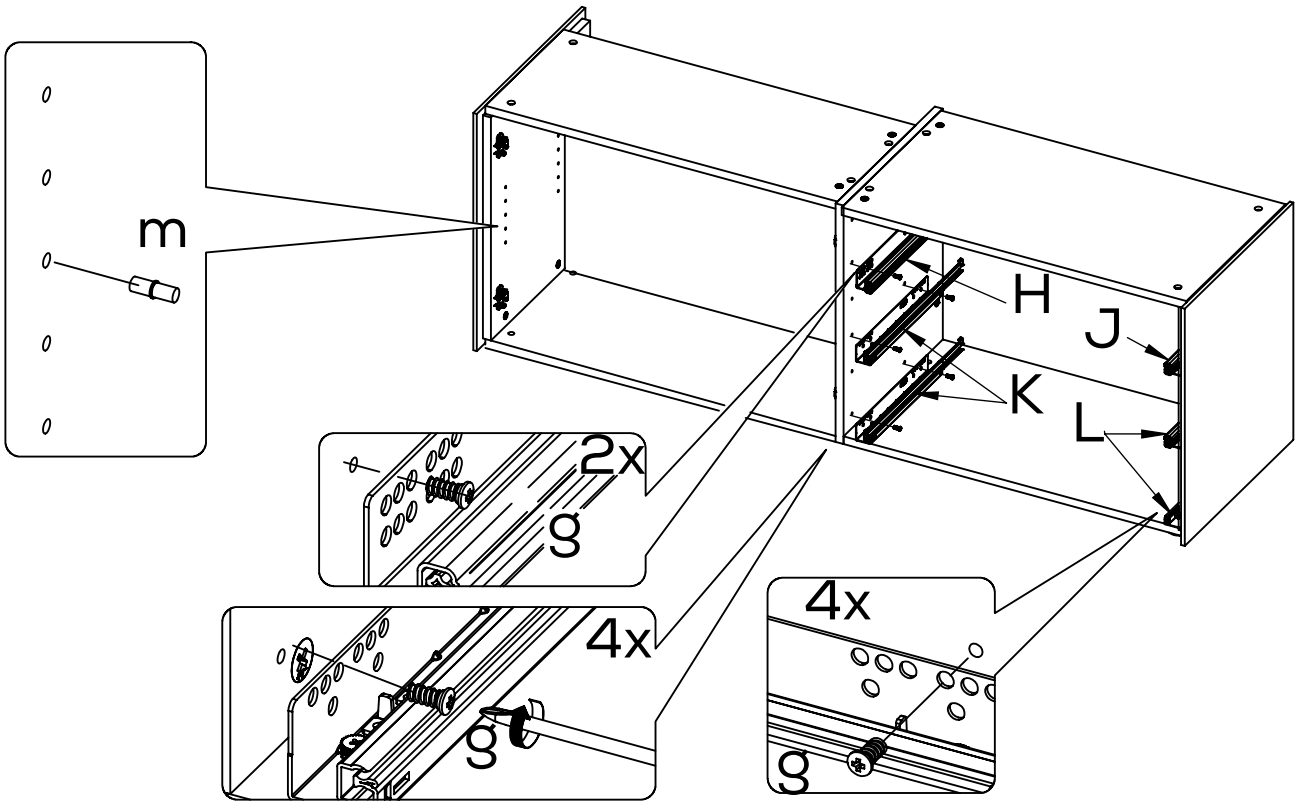

45

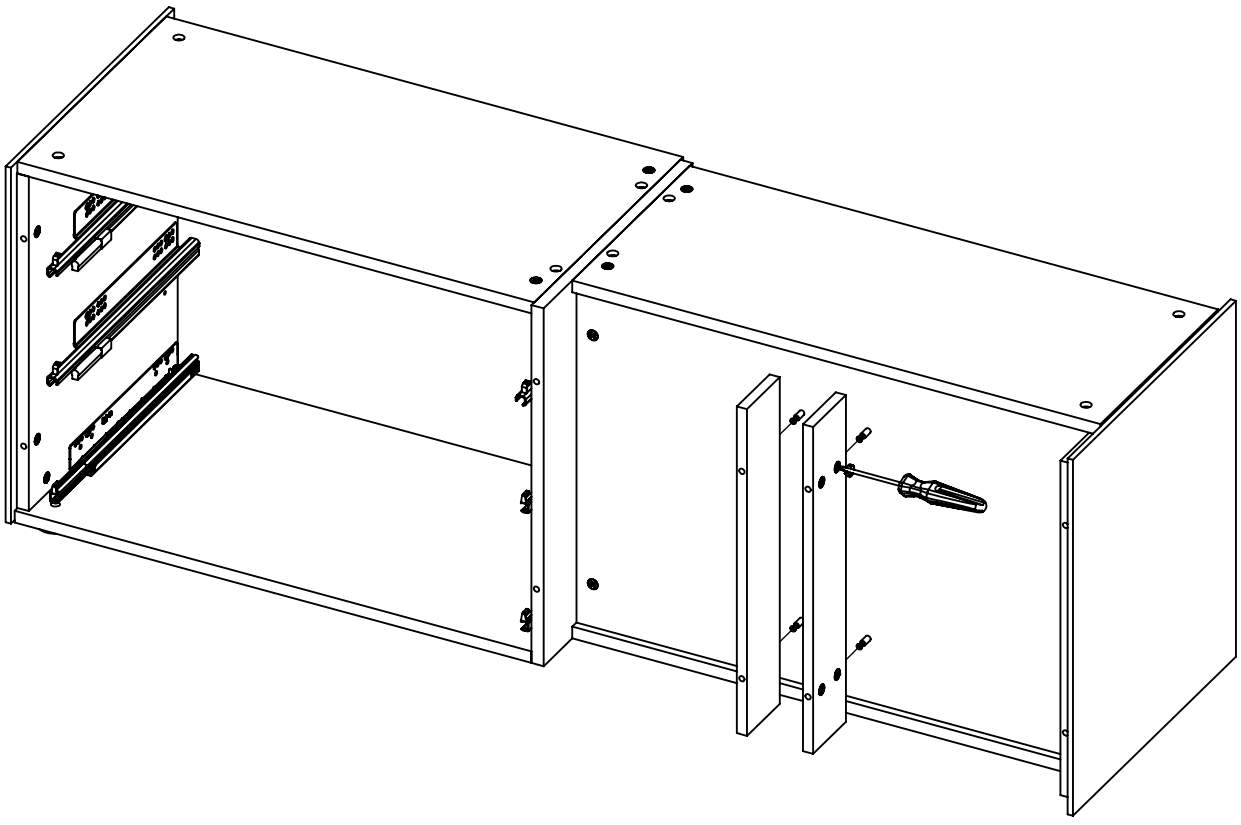

46

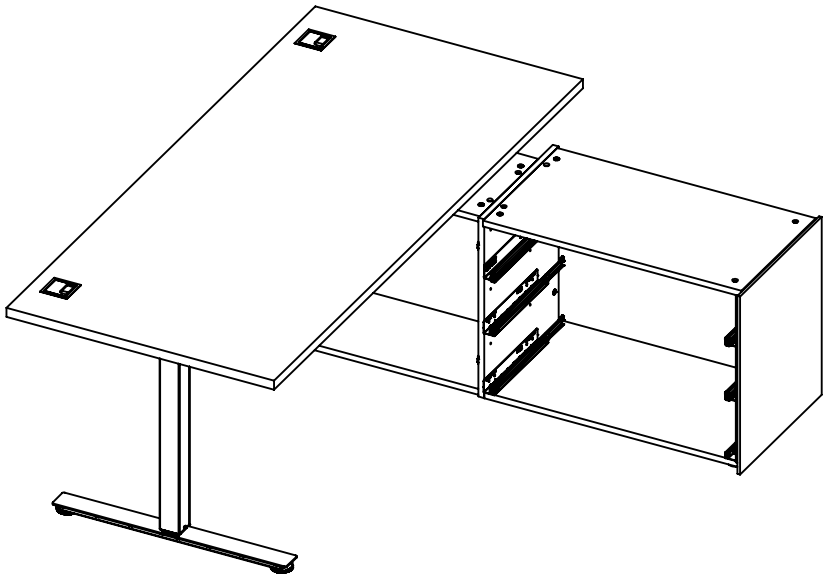

47

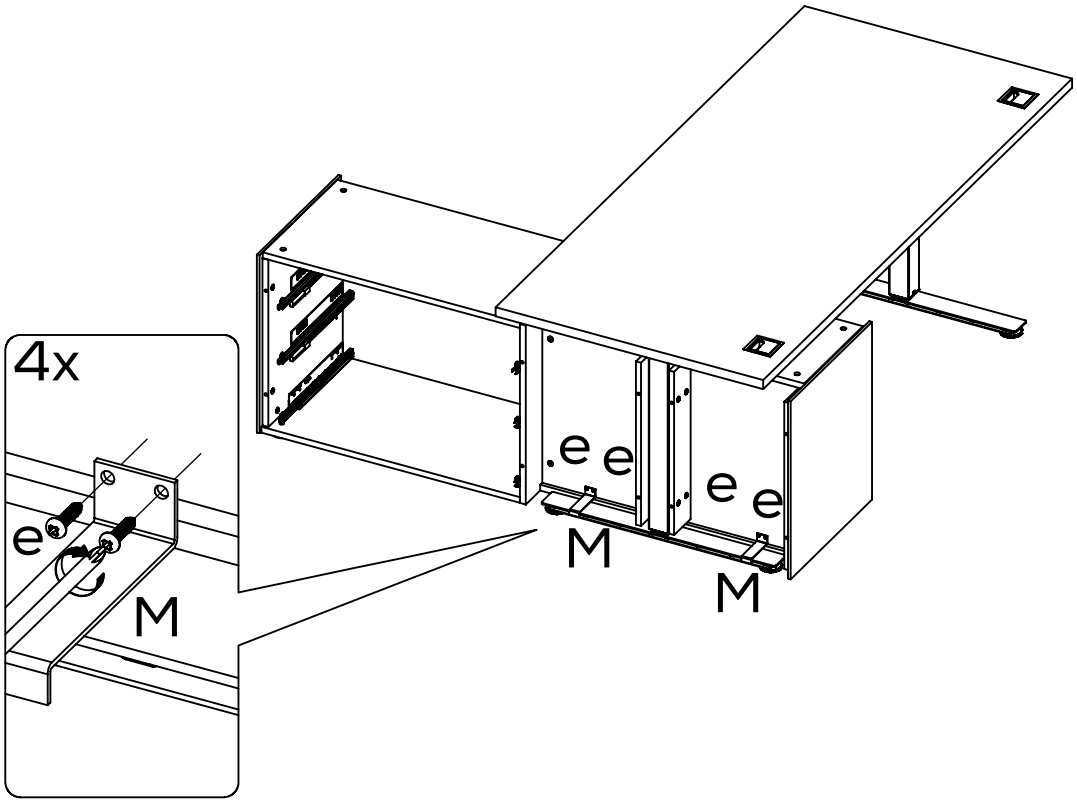

48

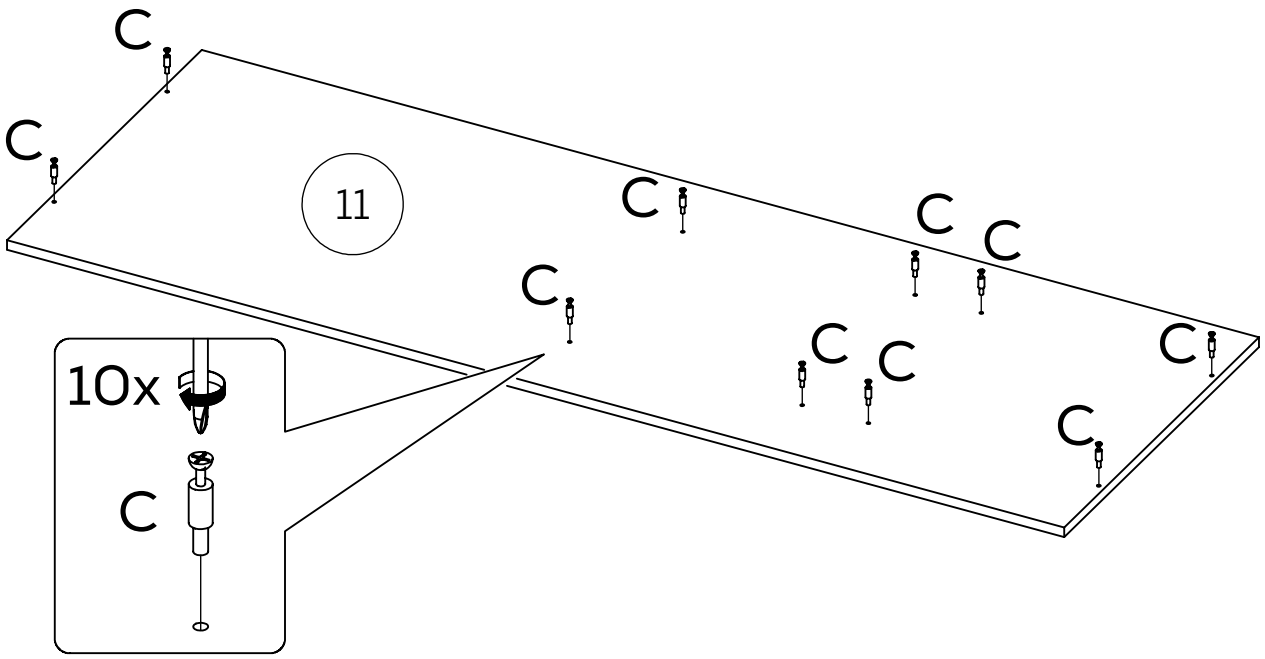

49

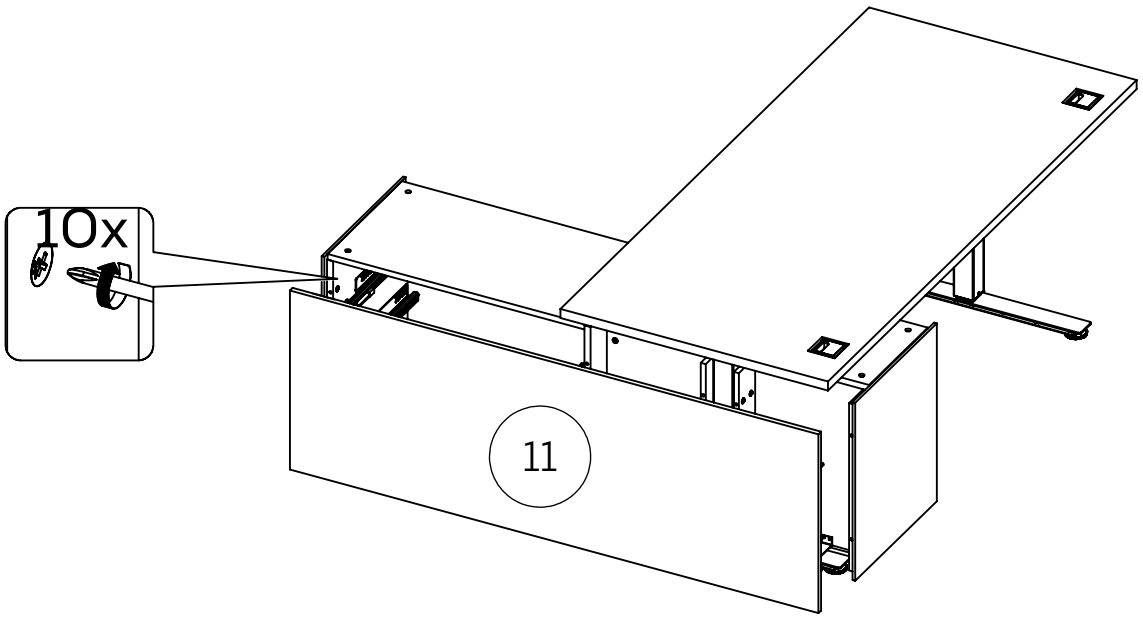

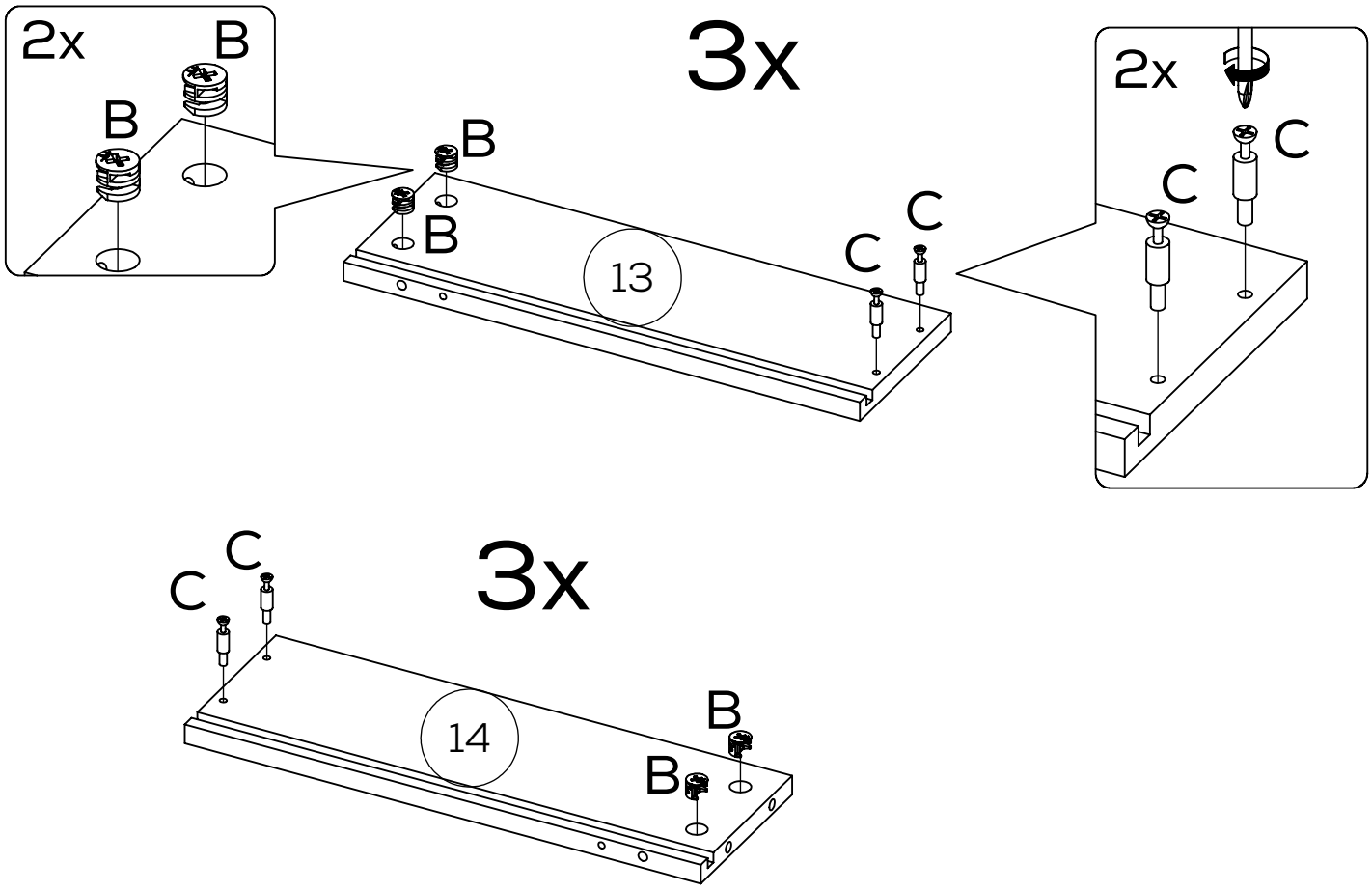
2x
B
B
3x
B
B
C
C
13
2x
C
C
3x
C
C
14
B
B

51

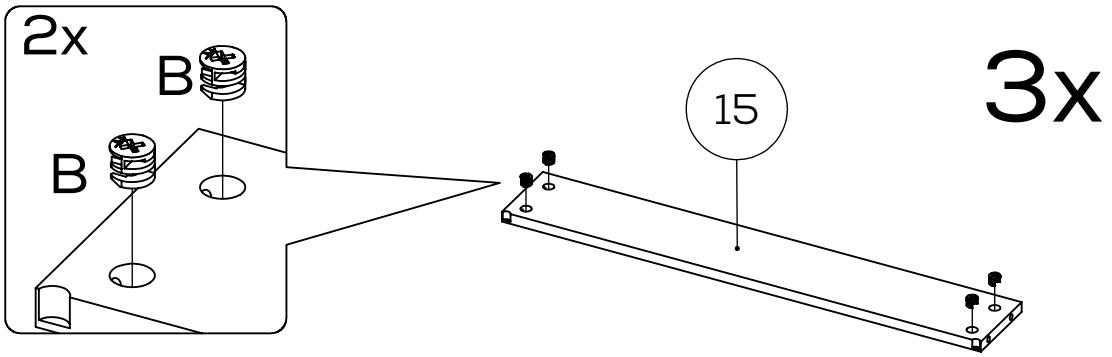

52

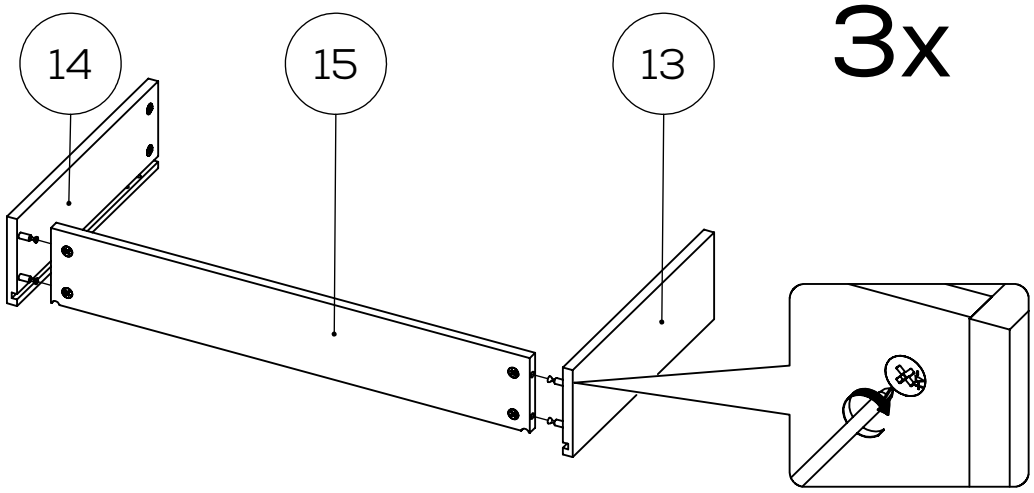

53

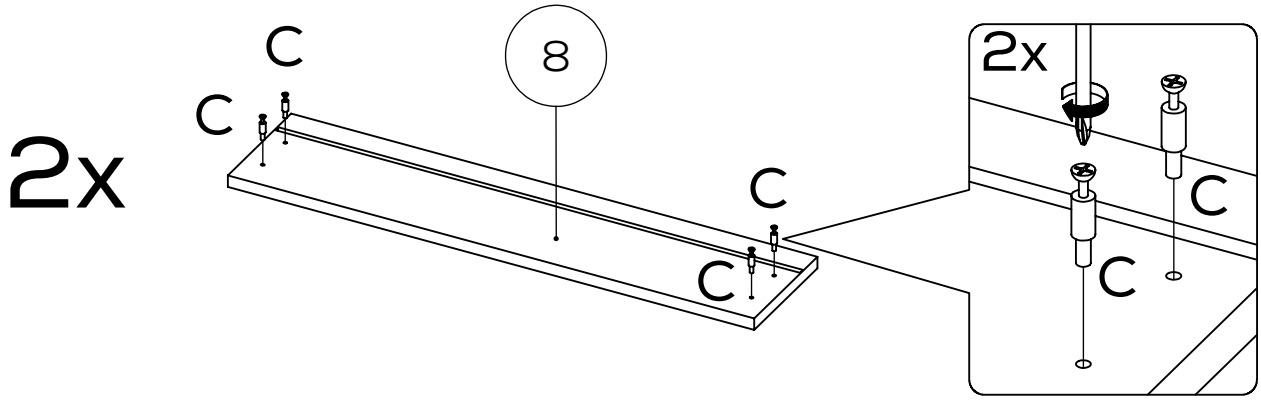

54

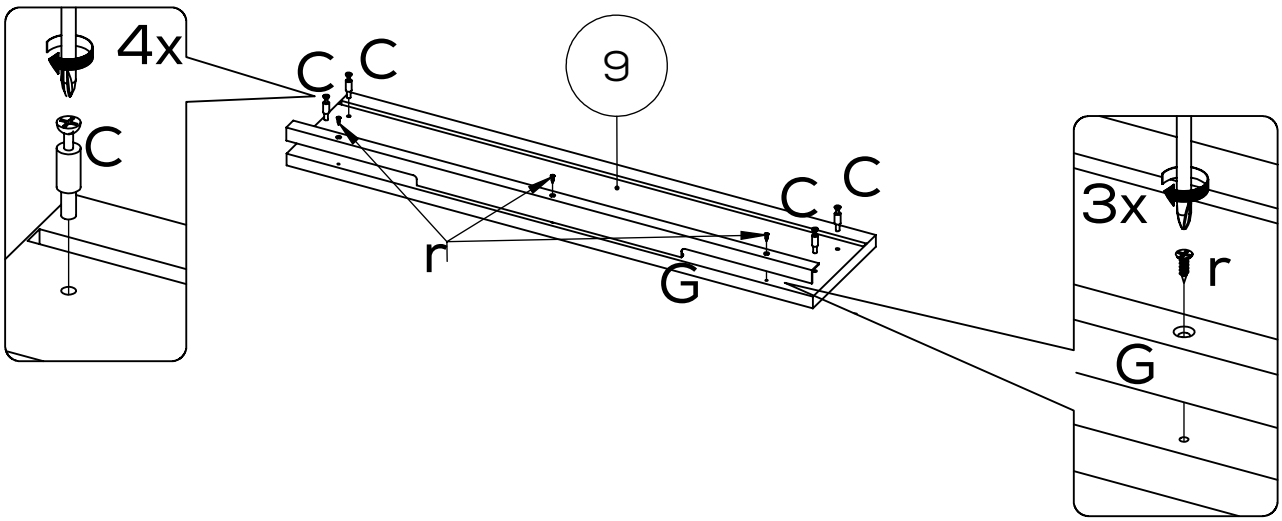

55

2x

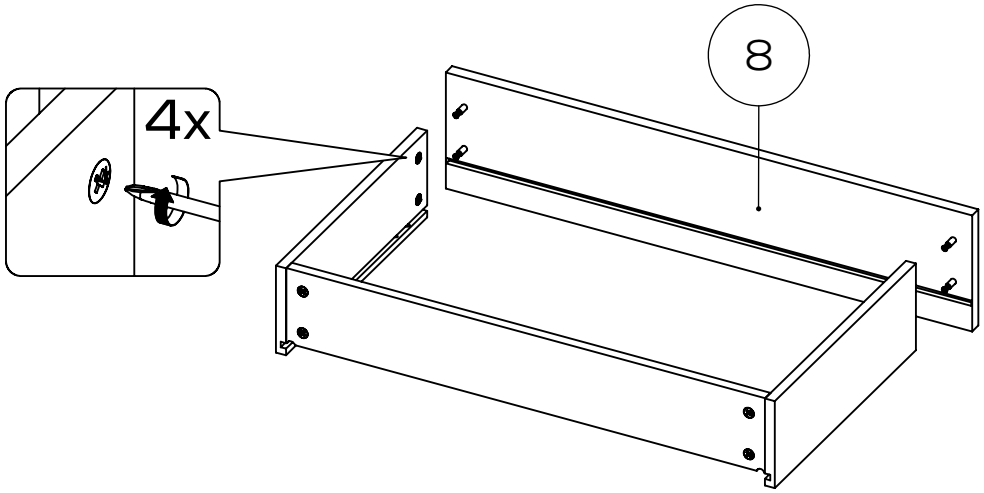

56

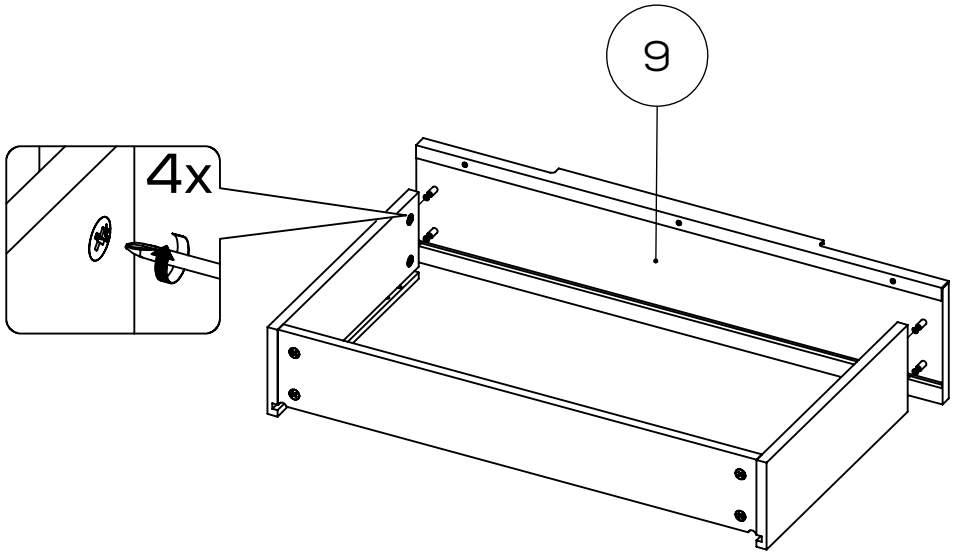

57

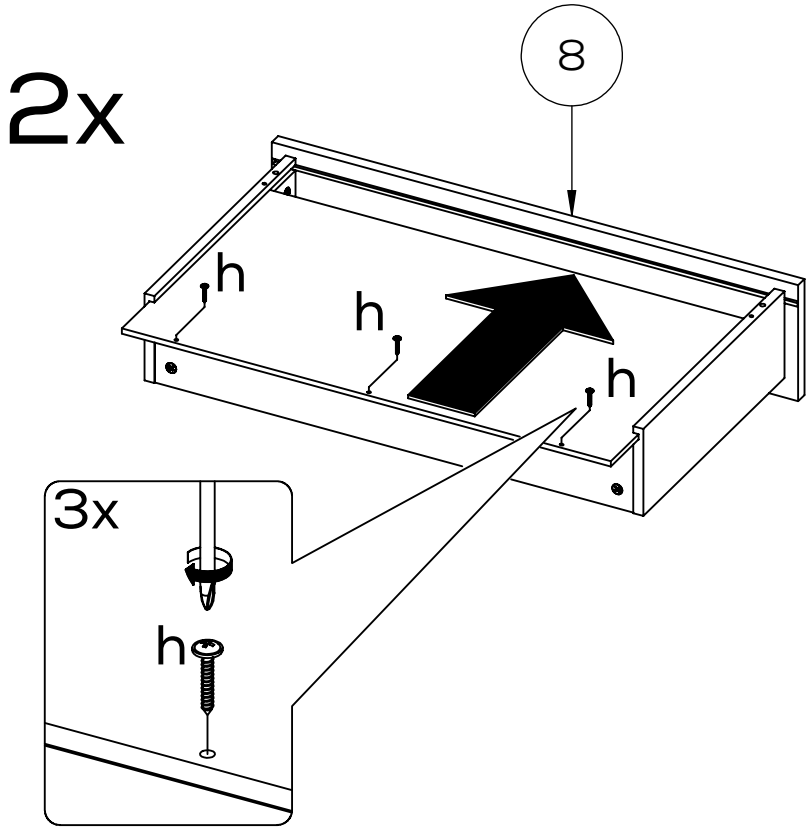

58

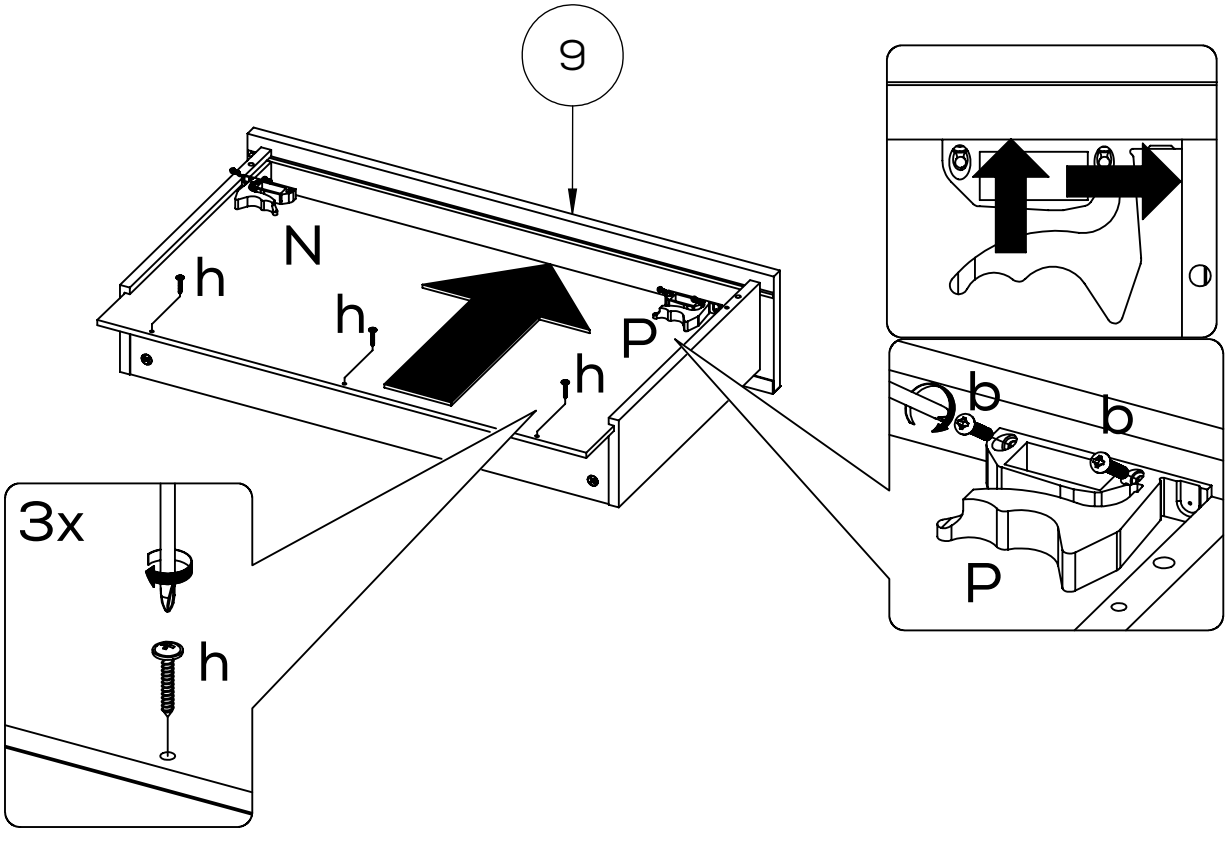

59

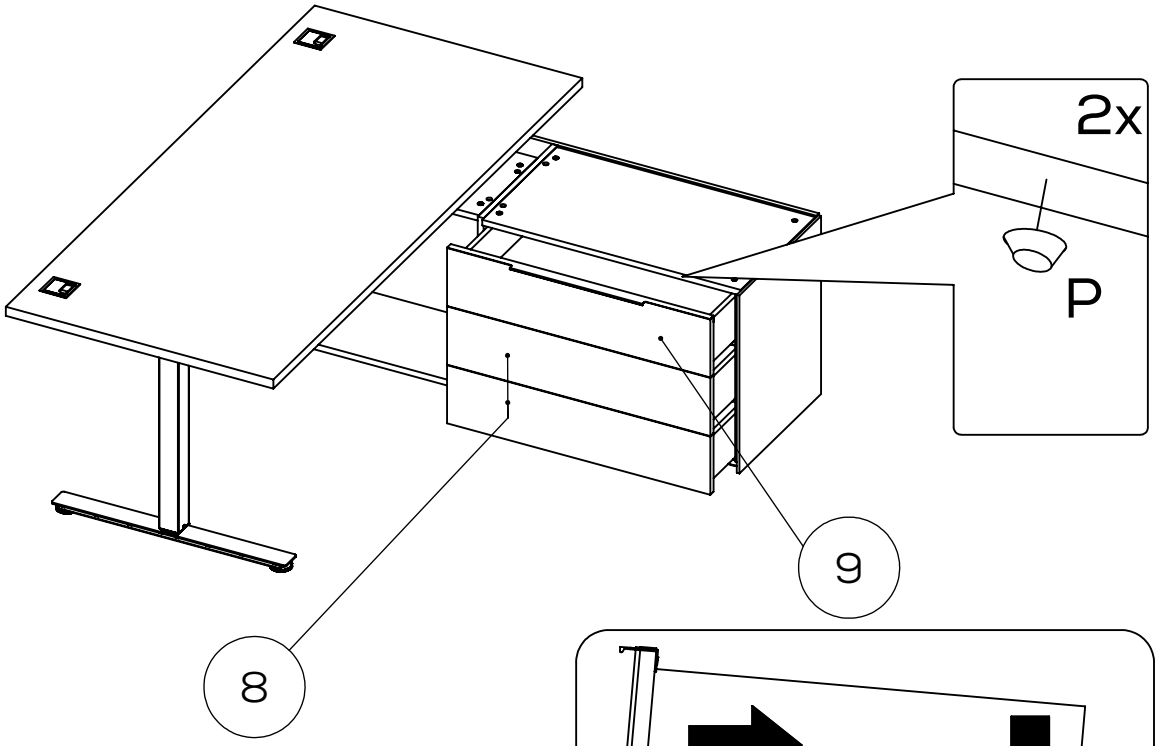

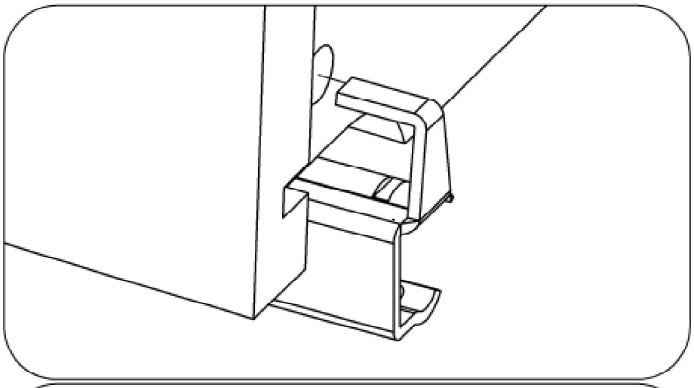

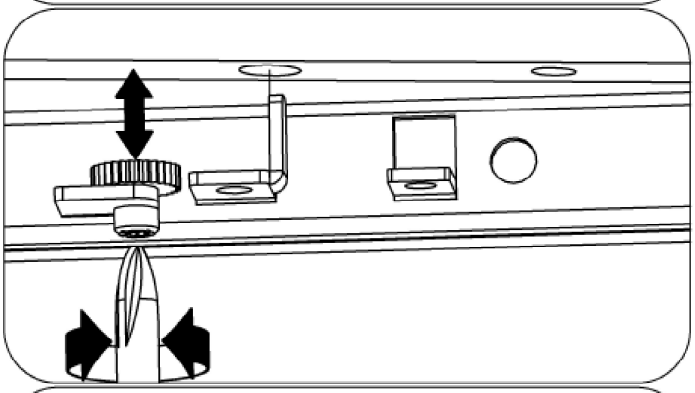

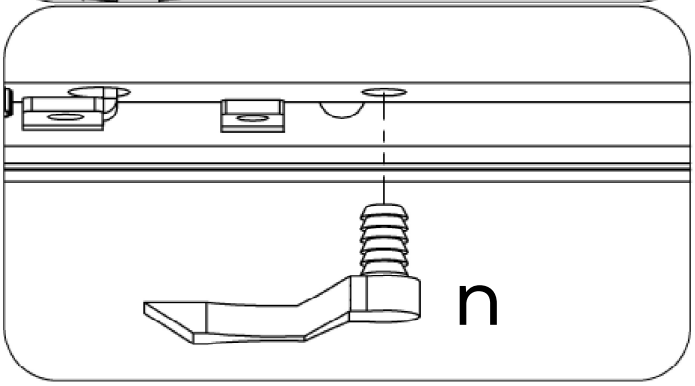

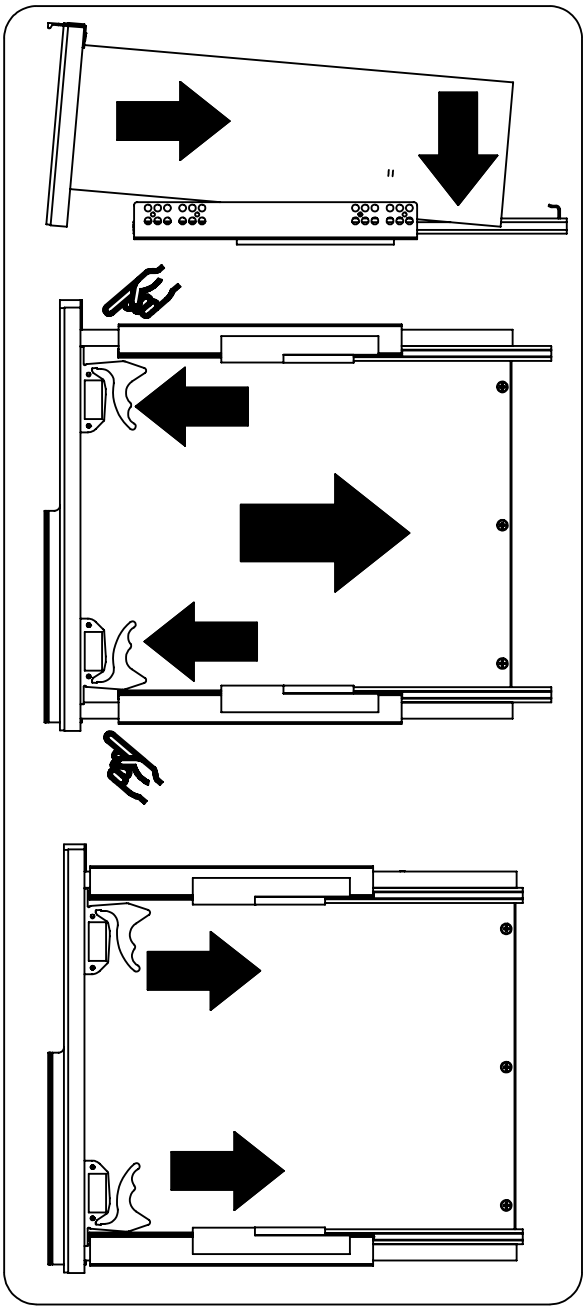

66

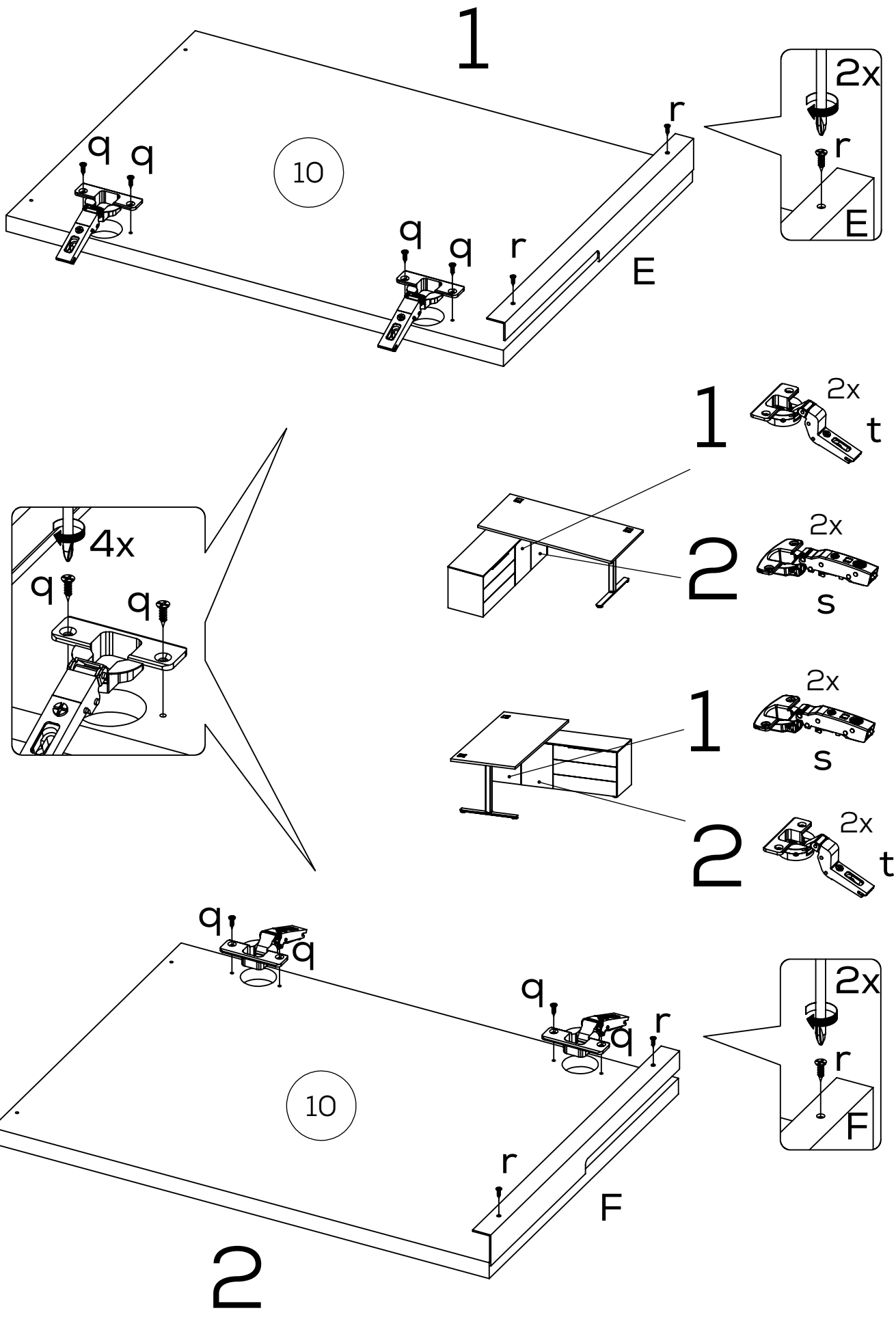

61

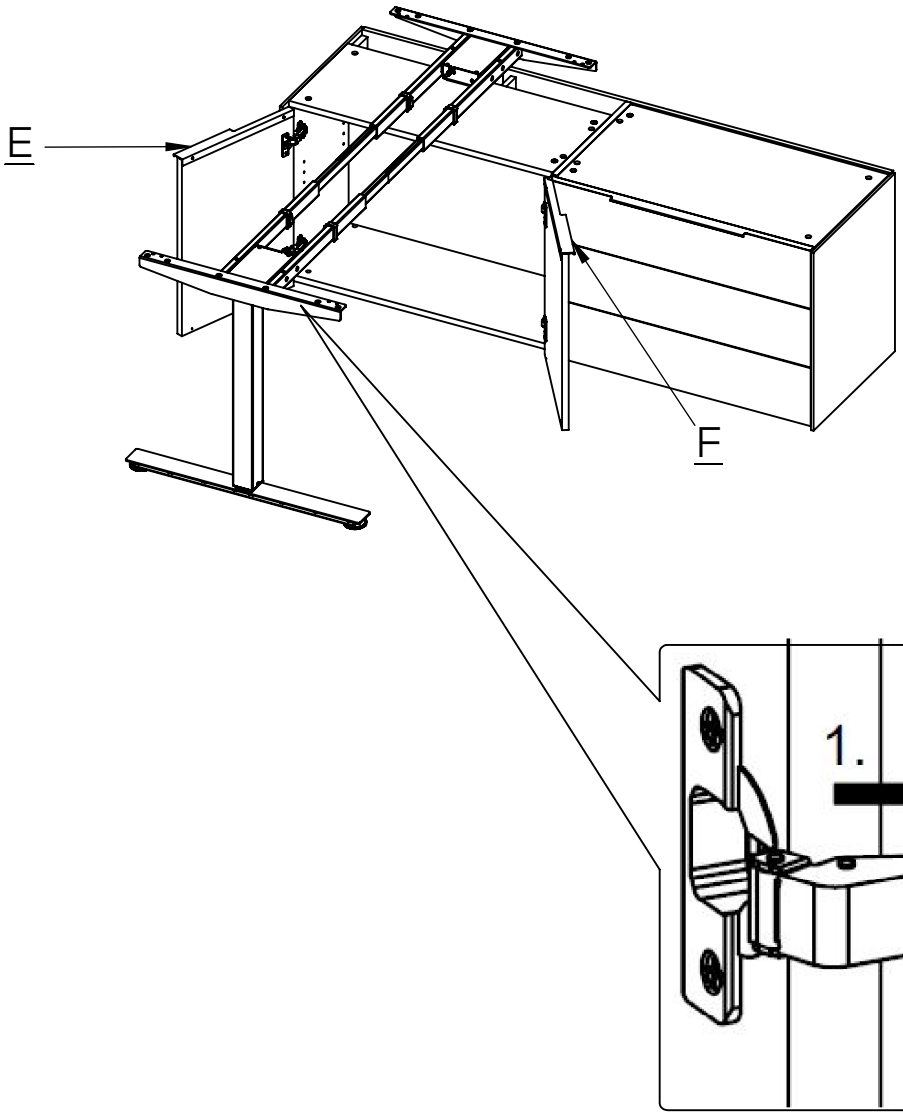

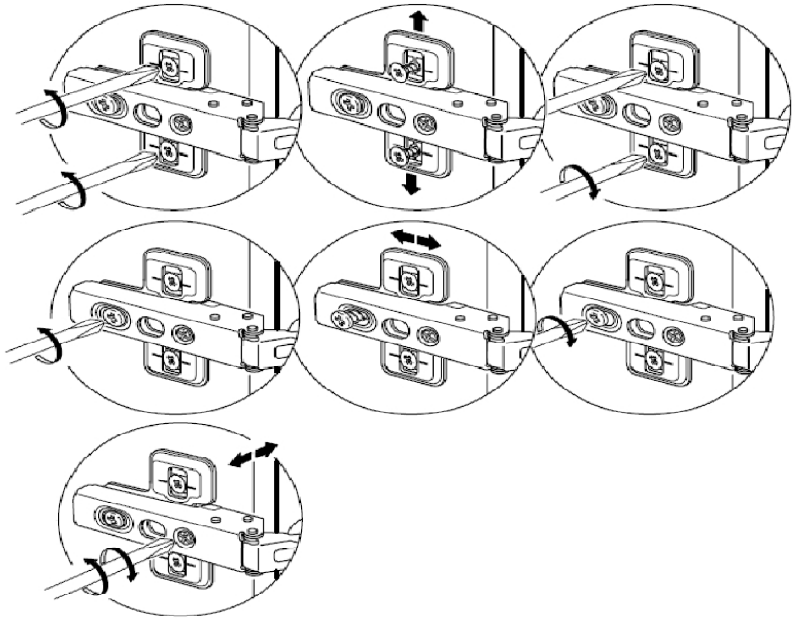
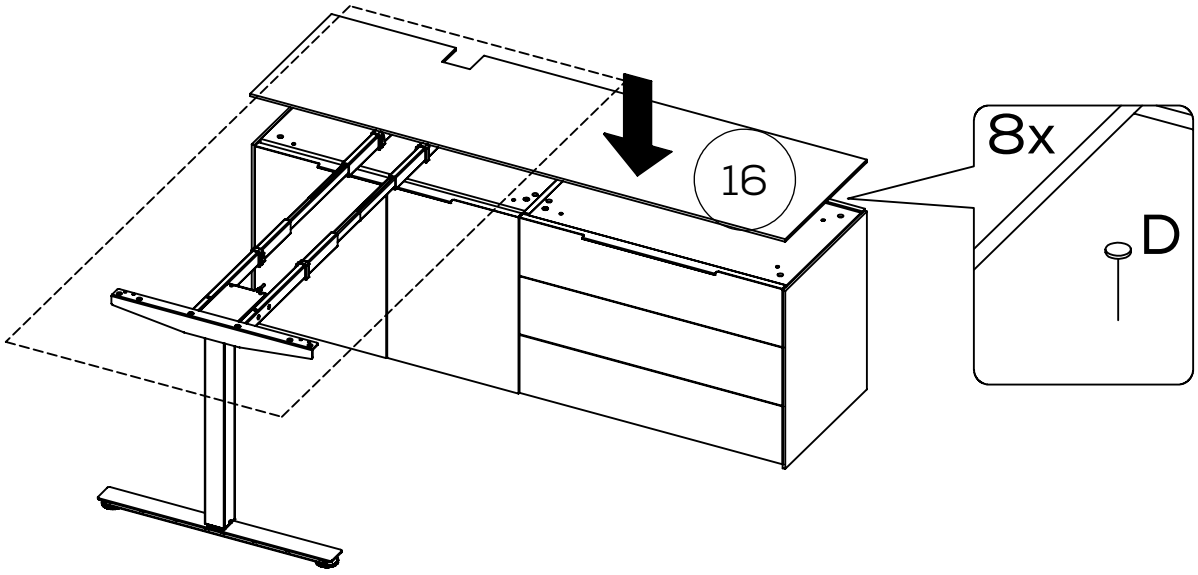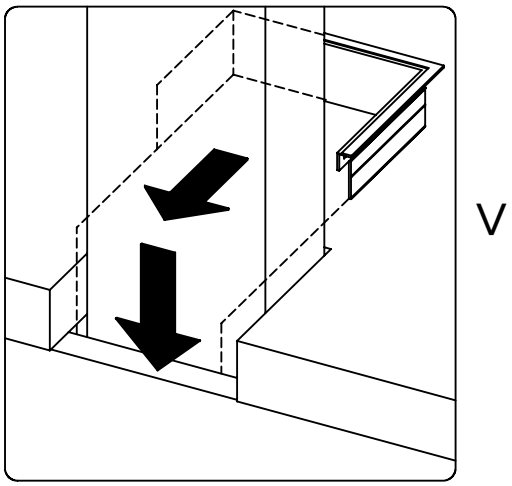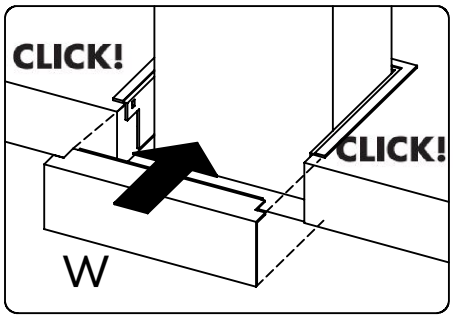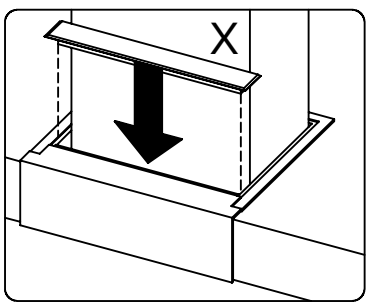
62