swiss bed concept

MONTAGEANLEITUNG
NOTICE DE MONTAGE
ASSEMBLY INSTRUCTION
ISTRUZIONE DI MONTAGGIO

HASENA
the dream factory

Bella

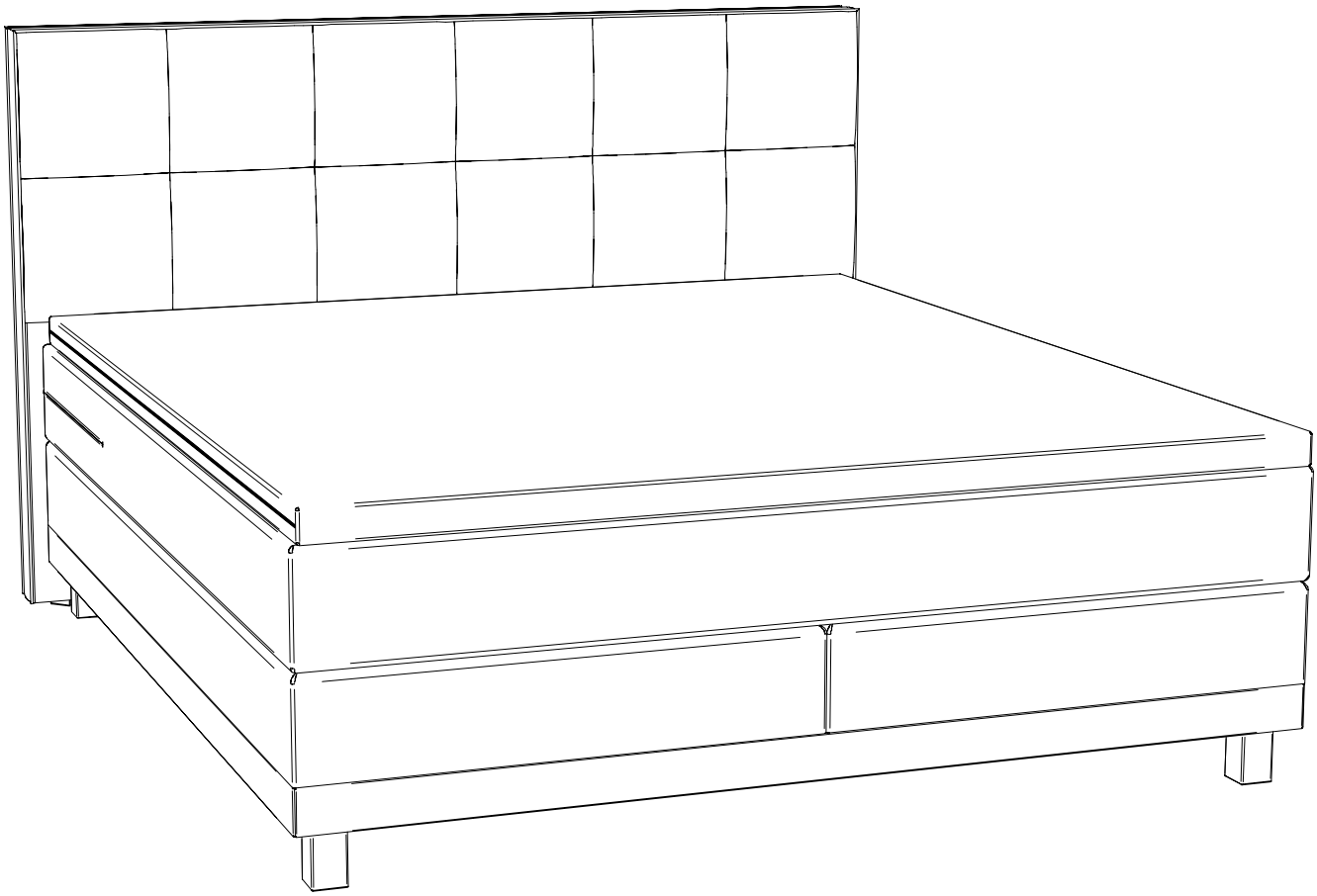

Benötigte Werkzeuge – Outils Nécessaires – Tools Required – Attrezzi Necessari

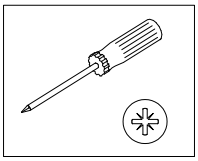

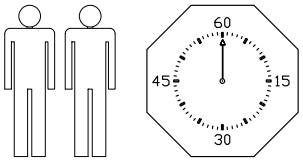

28.09.2021

660.01202

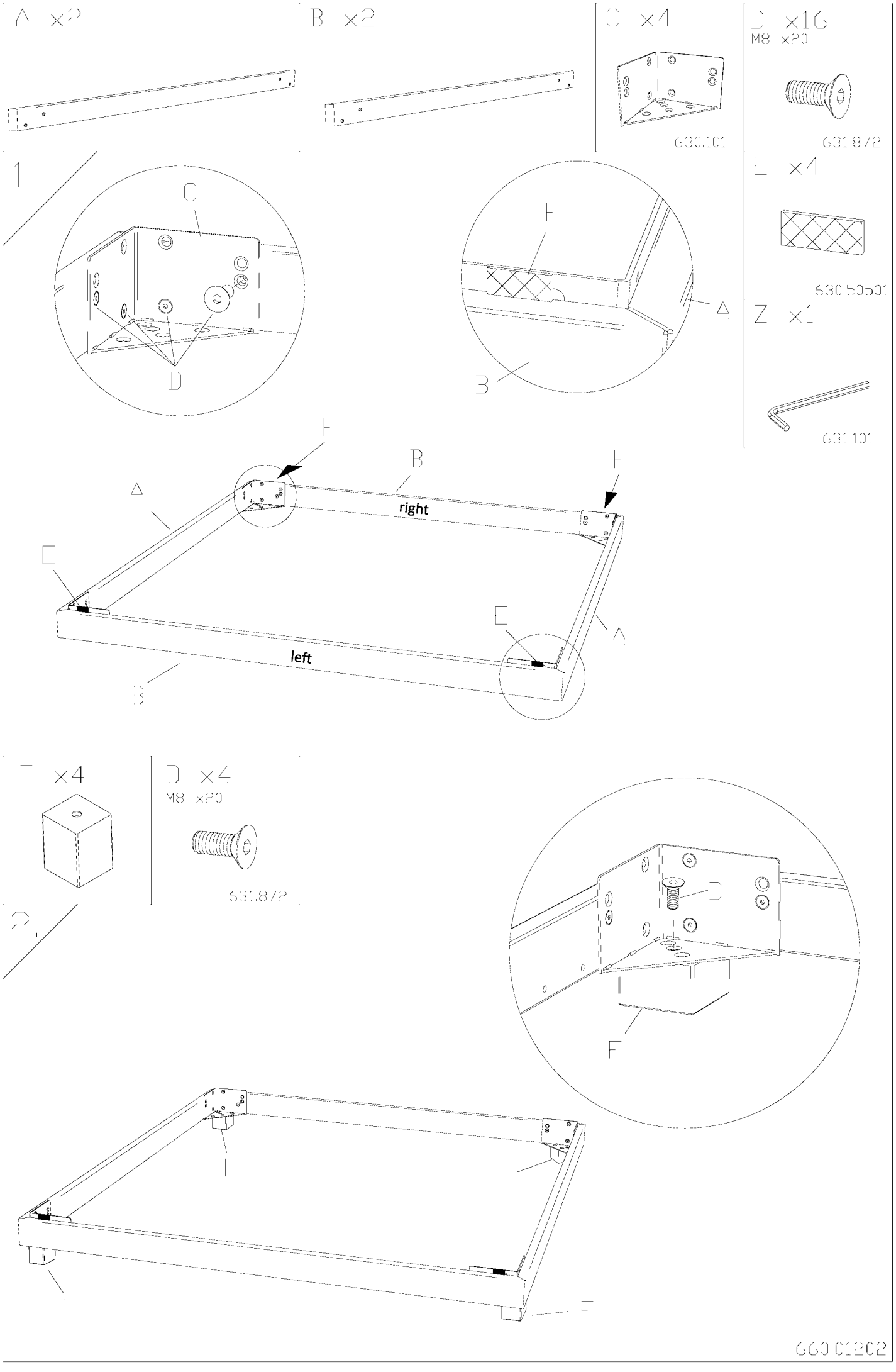
A x2
B x2
C x4
630.101
D x16
M8 x20
631.872
E x4
630.5501
Z x1
631.101
1
C
D
F
A
3
F
B
right
A
C
C
A
left
3
I x4
J x4
M8 x20
631.872
2
D
I
F
I
I
F

bei Breite 140cm
for width 140cm
pour la largeur 140cm
per misura 140cm

G x1

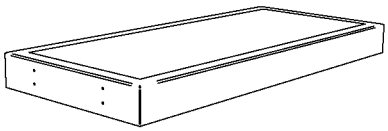

H x2

793.305

M x2

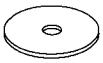

793.305

3a

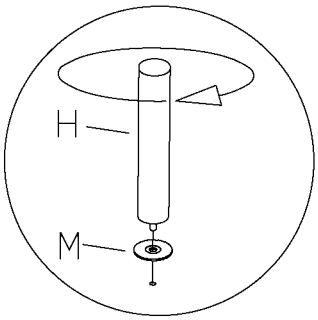

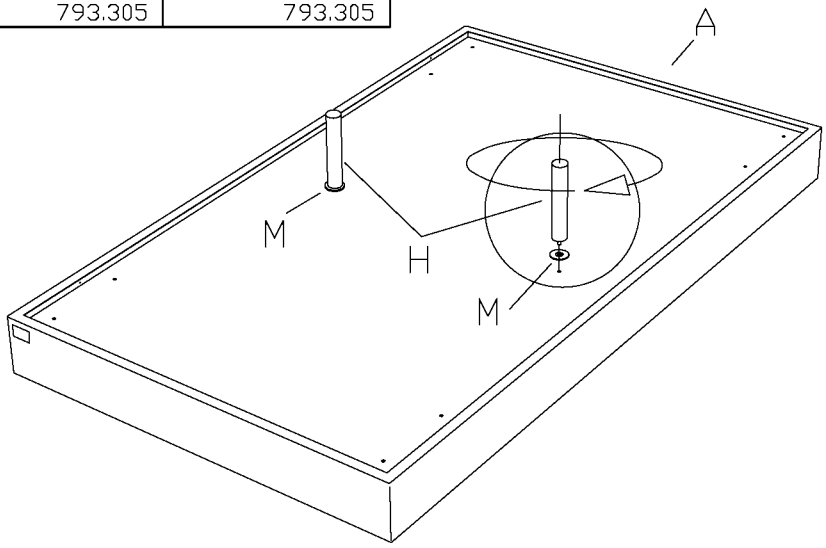

bei Breiten 140-200cm
for widths 140-200cm
pour la largeur 140-200cm
per misura 140-200cm

G x2

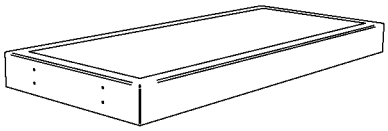

H x6

793.305

J x1

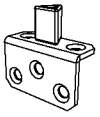

630.779

K x1

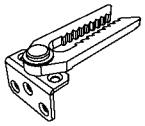

630.779

L x6
Ø4x20

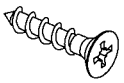

631.303

M x6

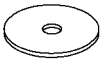

793.305

3b

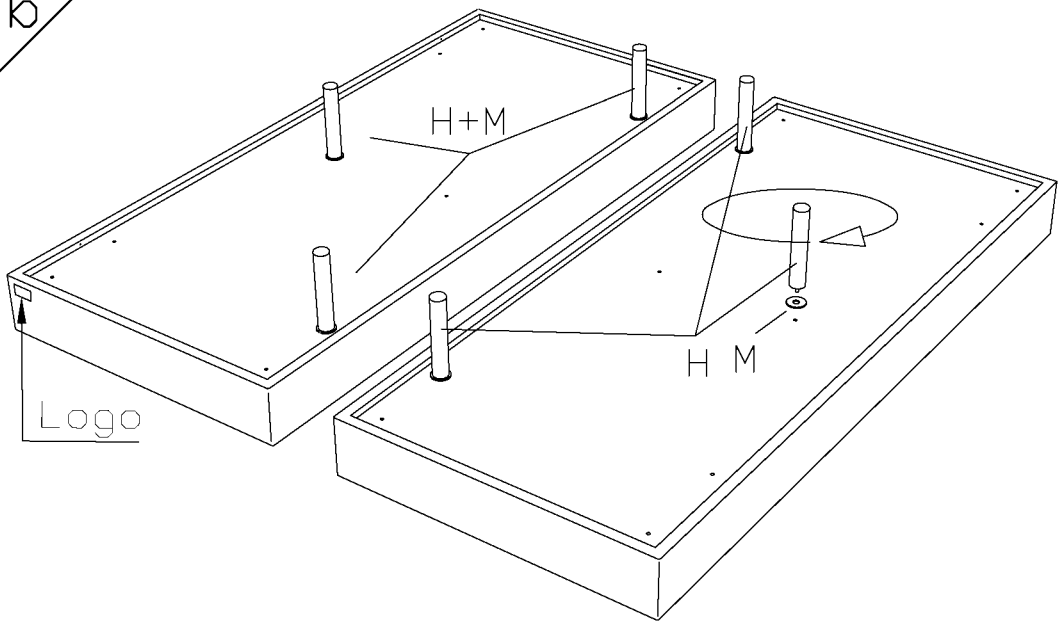

660.01202

4.

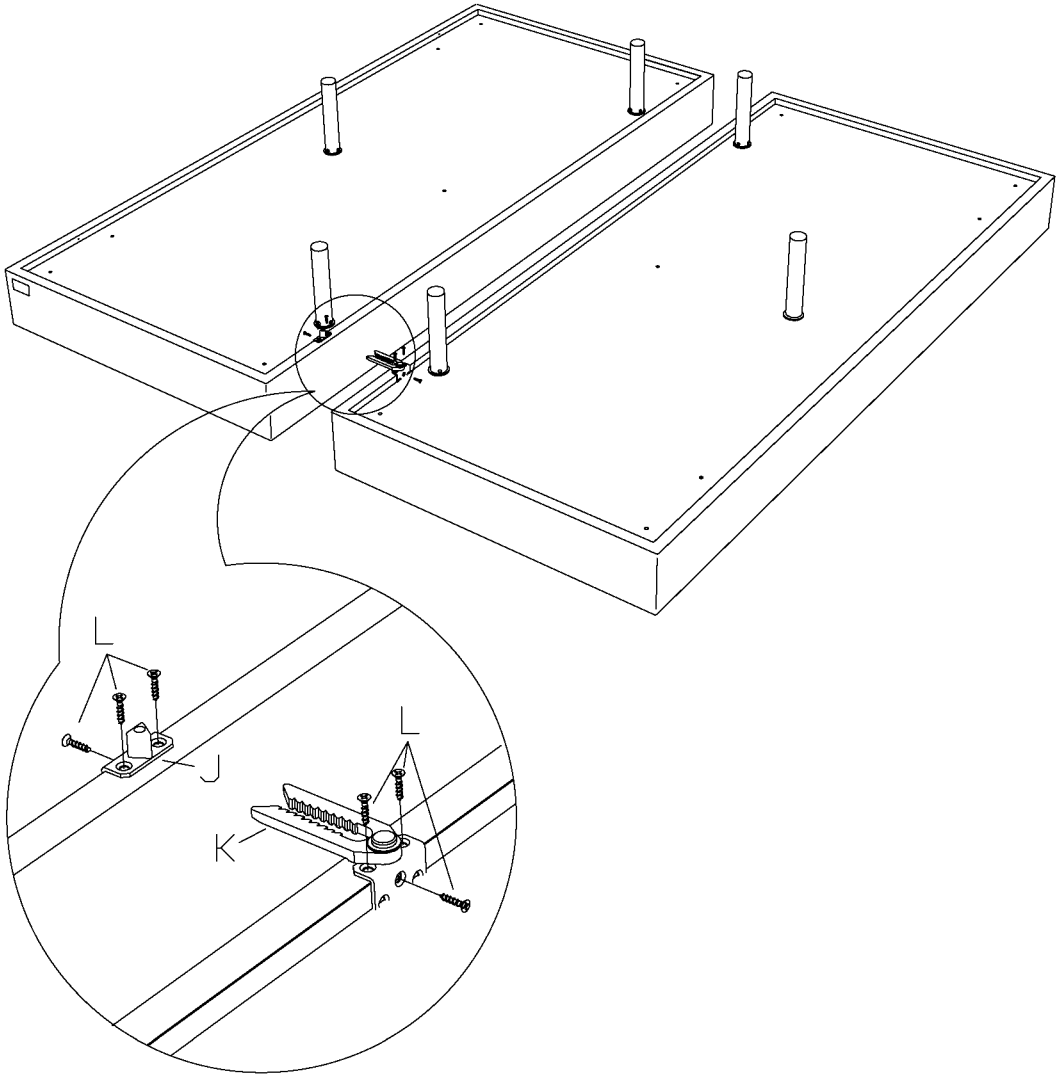

5.

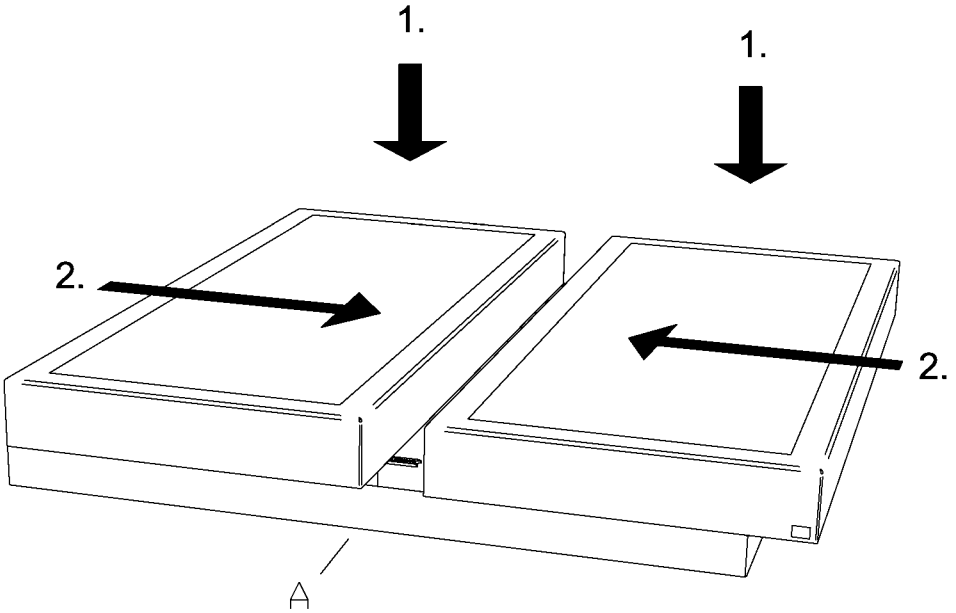

660.01202

□ x1	P x8	Q x8	R x8
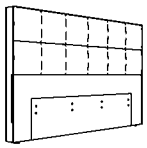	631.621	631.080	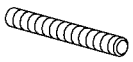 631.015

6.

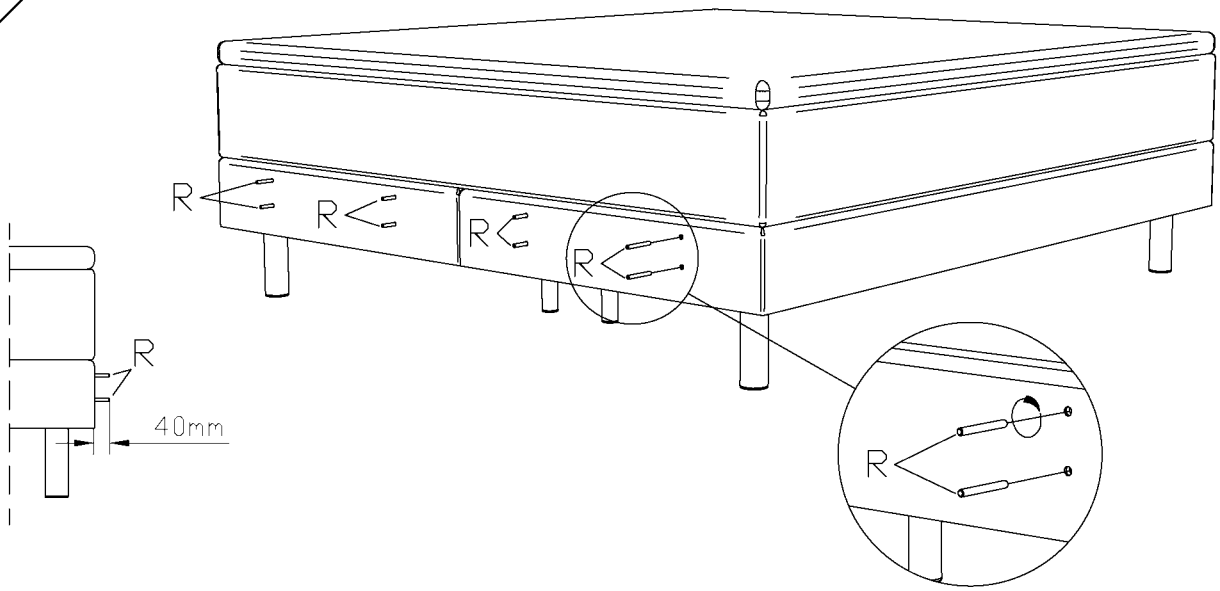

7.

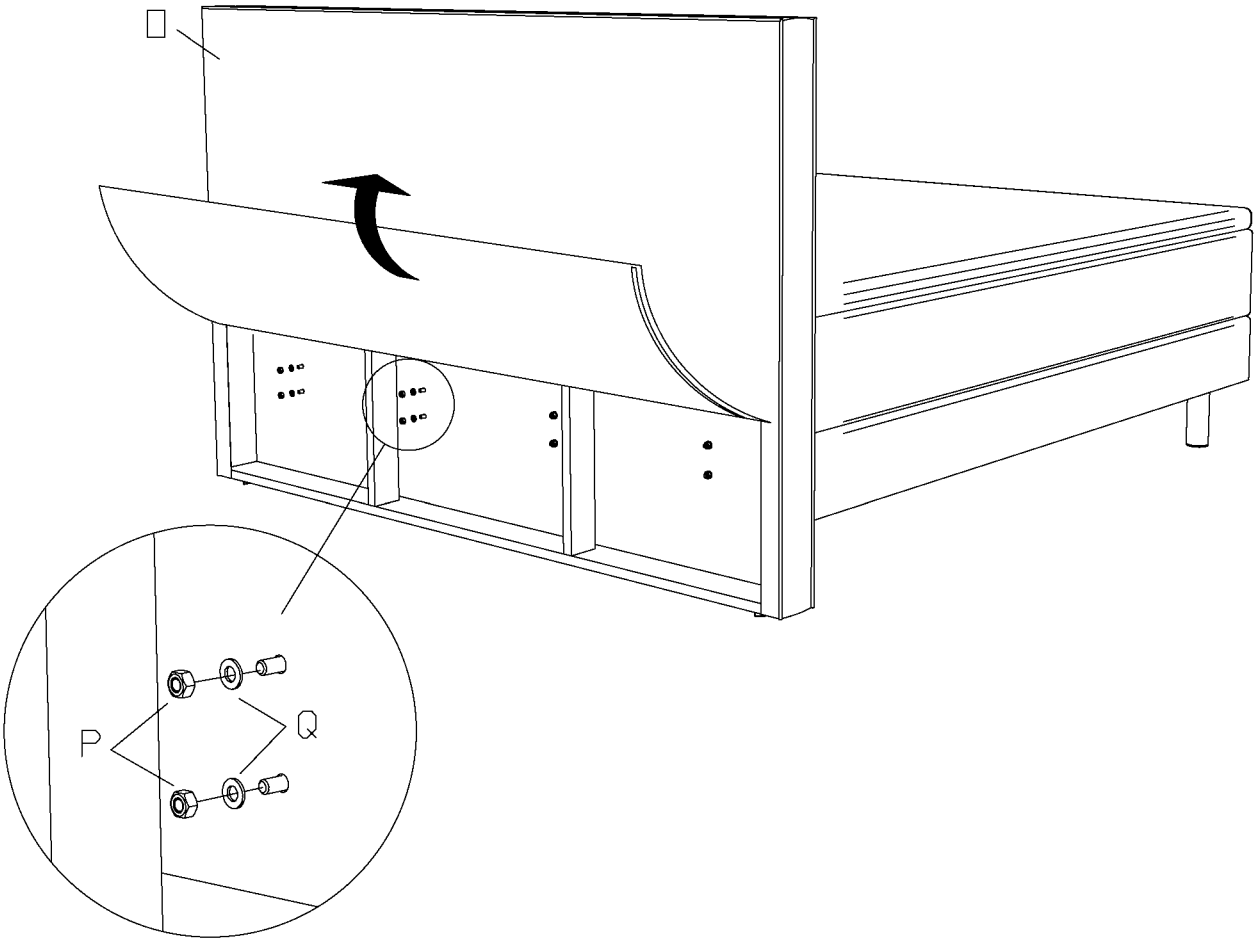

660.01202