swiss bed concept

MONTAGEANLEITUNG
NOTICE DE MONTAGE
ASSEMBLY INSTRUCTION
ISTRUZIONE DI MONTAGGIO

HASENA
the dream factory

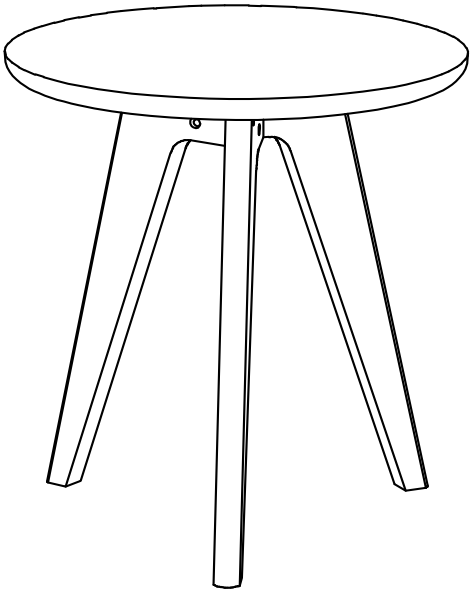

Benötigte Werkzeuge – Outils Nécessaires – Tools Required – Attrezzi Necessari

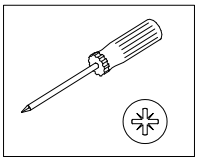

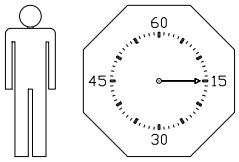

30.03.2020

660.00054

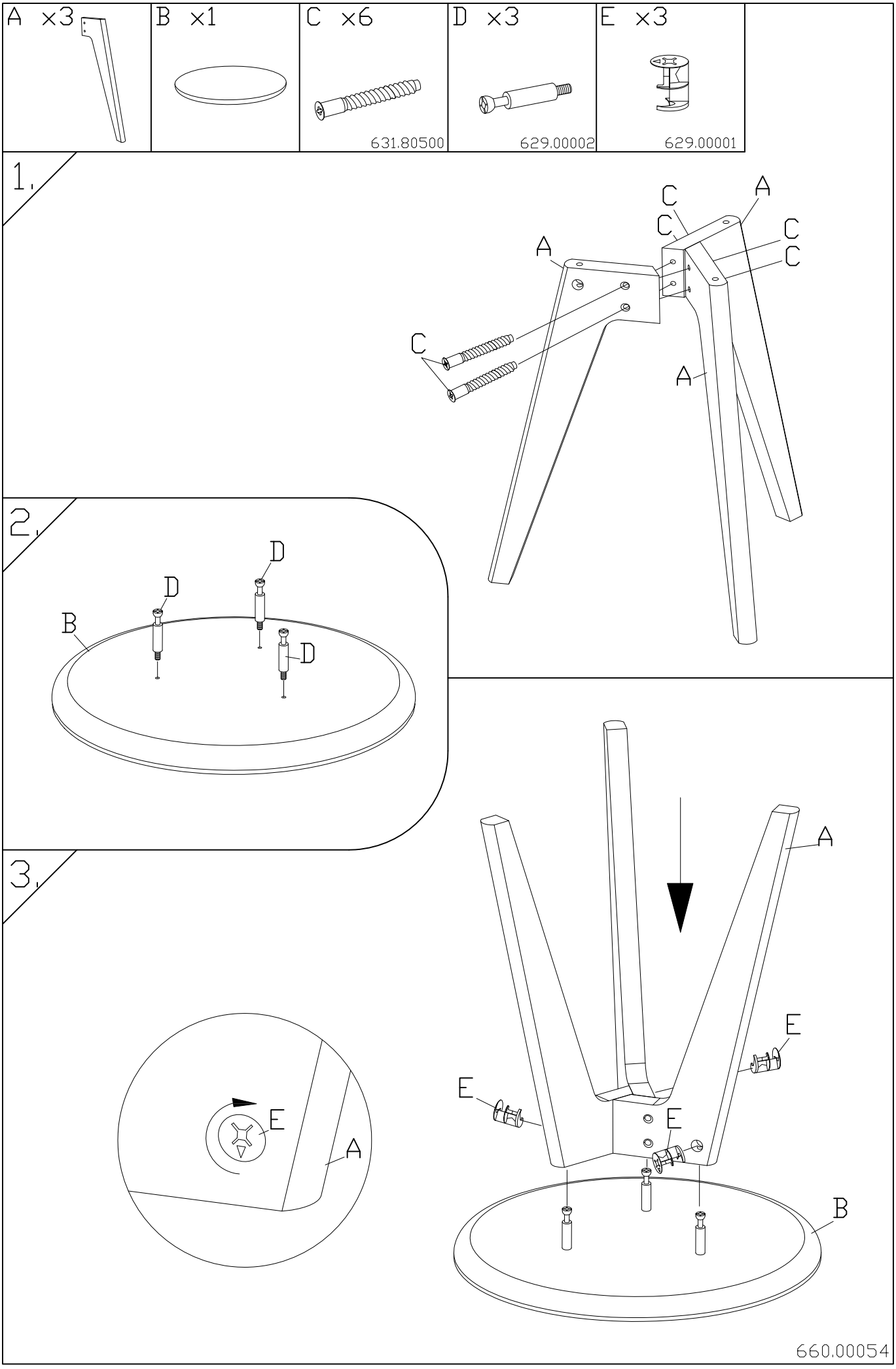
A ×3
B ×1
C ×6
631.80500
D ×3
629.00002
E ×3
629.00001
1.
A
C
C
C
C
A
C
A
2.
D
D
D
B
3.
E
A
E
E
E
A
B
660.00054