GLOBO
LIGHTING

57910-5S/57910-5SSA

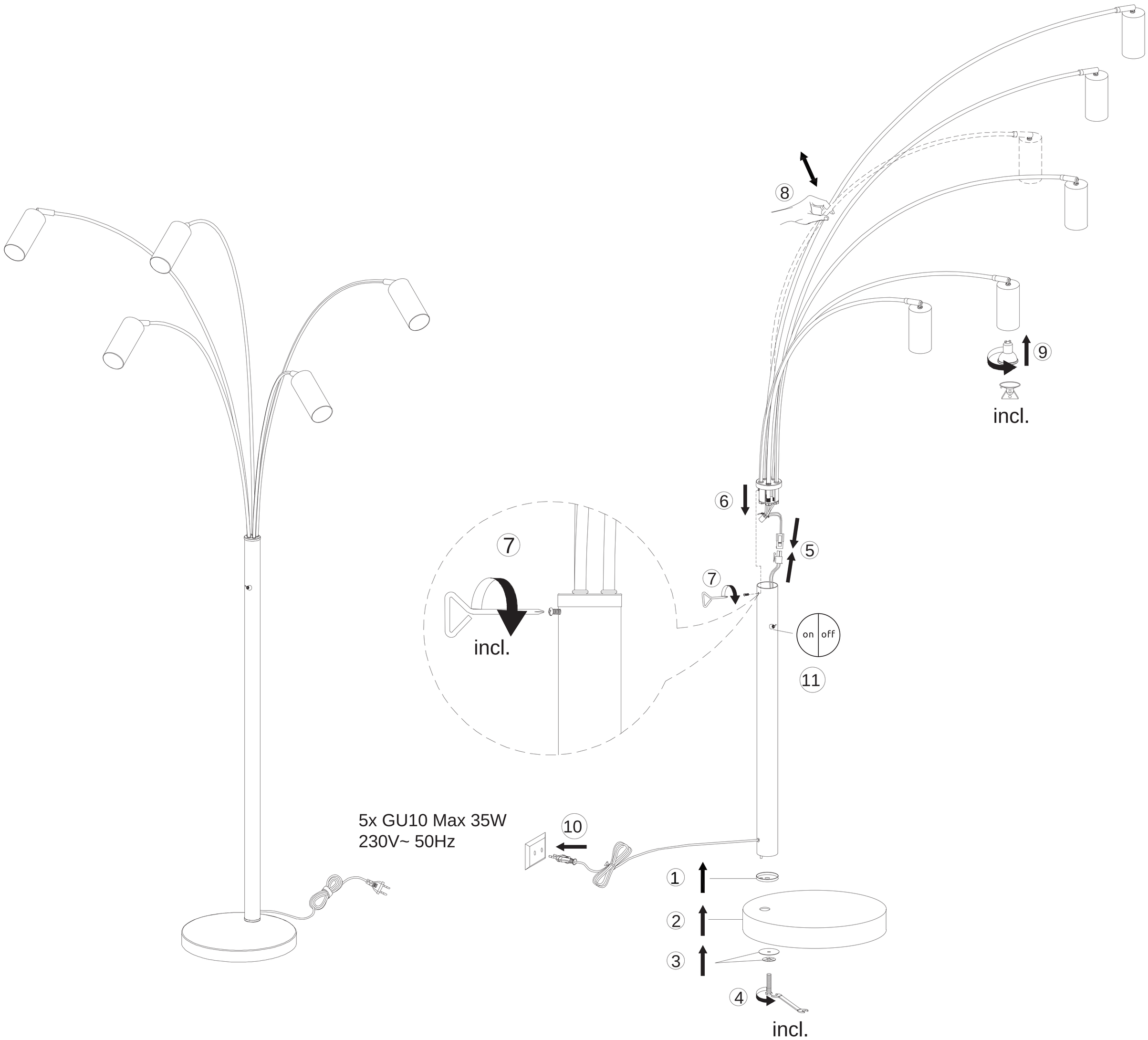

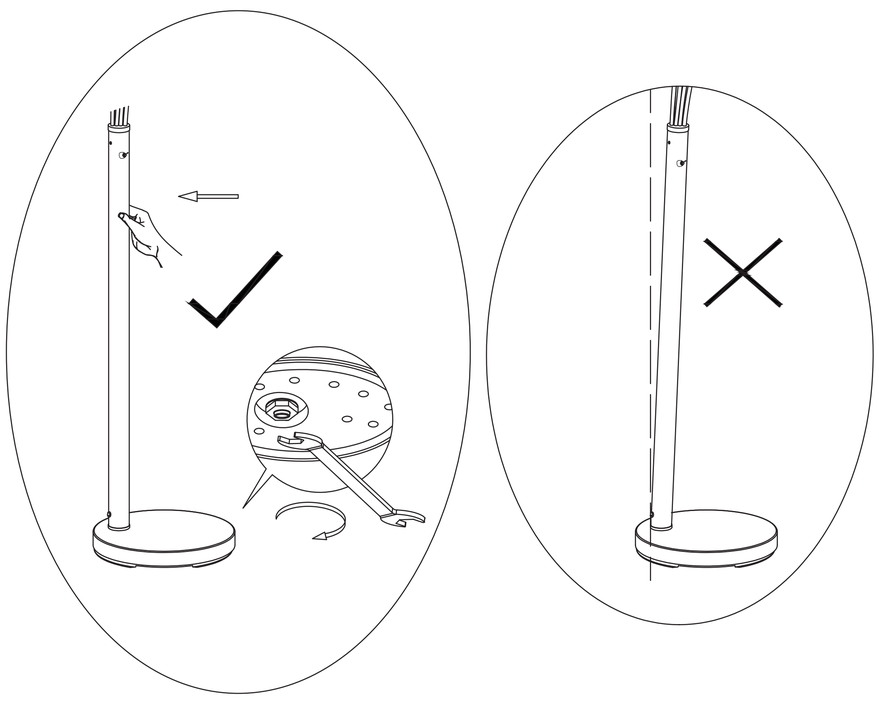

GLOBO Handels GmbH
Gewerbestrasse 3
A-9184 Sankt Peter, AUSTRIA
www.globo-lighting.com
office@globo-lighting.com