MAYTONI
DECORATIVE LIGHTING

Instruction

MOD174CL-06G

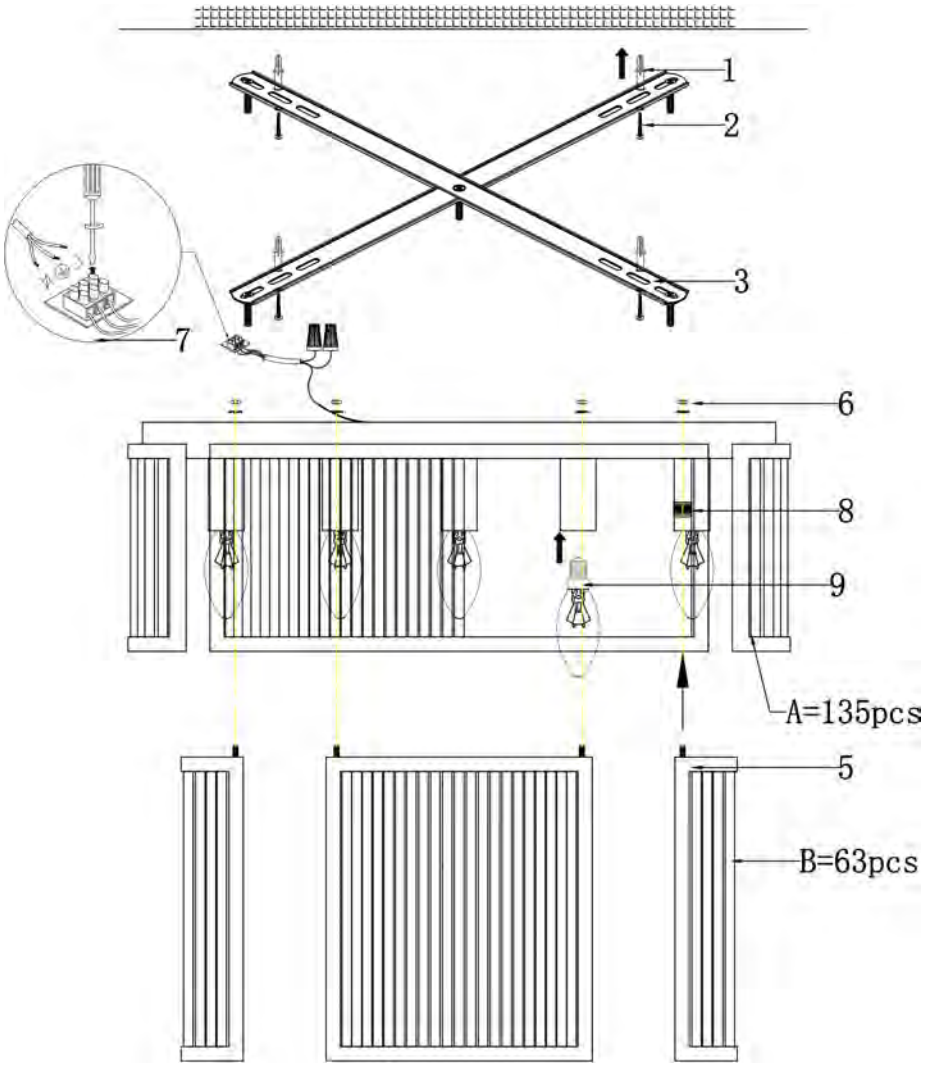

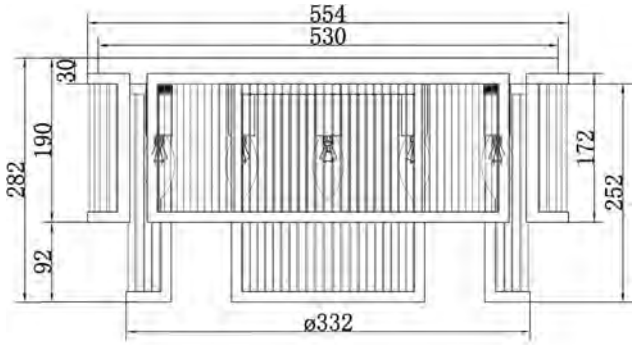

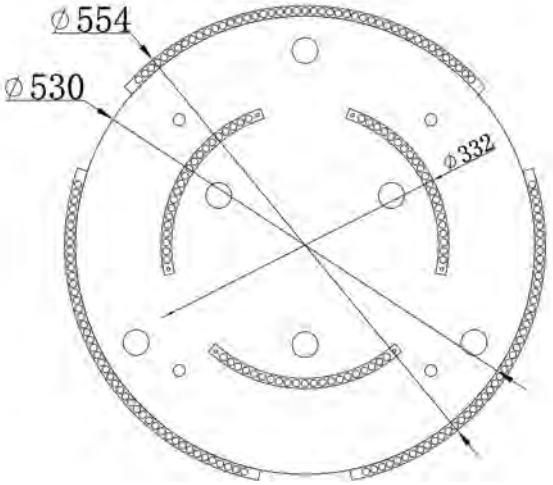

6xE14 60W

Model: MOD174CL-06G
Collection: Modern
Series: Frame
Ceilling Lamps